TRANSAT

Research and Innovation Action (RIA)

This project has received funding from the European Union's Horizon 2020 research and innovation programme under grant agreement No 754586.

Start date : 2017-09-01 Duration : 54 Months

Report on active barriers that complement the coating technics

Authors : Dr. Ion CRISTESCU (KIT), Mr. Cristian Postolache (IFIN-HH), Mr. Stefan Welte (KIT), Mr. Uwe Besserer (KIT), Mr. Robin Grösle (KIT)

TRANSAT - Contract Number: 754586

Project officer: Project Officer: Angelgiorgio IORIZZO

Document title	Report on active barriers that complement the coating technics
Author(s)	Dr. Ion CRISTESCU, Mr. Cristian Postolache (IFIN-HH), Mr. Stefan Welte (KIT), Mr. Uwe Besserer (KIT), Mr. Robin Grösle (KIT)
Number of pages	45
Document type	Deliverable
Work Package	WP01
Document number	D1.4
Issued by	KIT
Date of completion	2021-11-19 11:04:59
Dissemination level	Public

Summary

Four anti-permeation cells based on active barrier concept have been manufactured and installed in a glove box at KIT-TLK that was equipped with the required infrastructure for tritium processing. The measurements carried out at TLK have proven that the anti-permeation cells based on active barrier concept is a suitable option for mitigation the tritium permeation. The amount of tritium that can be removed after the permeation through the first wall is at least two order of magnitude higher that tritium that permeates the second wall. Similar performances have been proven on the experiments carried out at IFIN HH Bukarest, consisting of a double wall pipe covered with a copper layer. The feasibility of implementing such concept in an industrial heat exchanger, as is the steam generator of the CANDU reactors, have been investigated

Approval

Date	By
2021-11-19 11:05:43	Dr. Ion CRISTESCU (KIT)
2021-11-19 11:08:04	Mr. Christian GRISOLIA (CEA)

Table of contents

Index of Tables

Table of figures

This project has received funding from the Euratom research and training programme 2014-2018 under the grant agreement n°754586. The content in this report reflects only the views of the authors. The European Commission is not responsible for any use that may be made of the information it contains.

Abbreviations

BWR	Boiling Water Reactor
EC DG RTD	European Commission – Directorate General for Research and Innovation
DoA	Description of Action
ECCP	Electronic Collaborative Content Platform
ExCom	Executive Committee
GB	Governing Board
GB	Governing Board
GCR	Gas Cooled Reactor
IFIN HH	Institute for Physics and nuclear engineering Horia Hulubei
LFR	Lead-cooled Fast Reactors
MSR	Molten Salt Reactors
PFD	Process Flow Diagram
PMO	Project Management Office
PQP	Project Quality Plan
PR	Periodic report
PWR	Pressurized Heavy Water Reactor
SFR	Sodium-cooled Fast Reactors
QA	Quality assurance
TLK	Tritium Laboratory Karlsruhe
V/HTR	High/Very High Temperature Reactor
WP	Work package
WPL	Work package leader

Summary

Four anti-permeation cells based on active barrier concept have been manufactured and installed in a glove box at KIT-TLK that was equipped with the required infrastructure for tritium processing. The anti-permeation cell with two grooves have been tested several times in various conditions aiming to define the most suitable operation conditions and to get the operators familiar with the facility. Based on preliminary results collected during the operation of the anti-permeation cell with two grooves it was identified that purging the grooves area with a relatively low flow rate of He-H2 mixture provides good accuracy on tritium accountancy and efficiency of the active barrier concept.

The measurements carried out at TLK have proven that the anti-permeation cells based on active barrier concept is a suitable option for mitigation the tritium permeation. The amount of tritium that can be removed after the permeation through the first wall is at least two order of magnitude higher that tritium that permeates the second wall. It seems that the number of grooves doesn't play a significant role in the efficiency of the concept in the case that during the manufacturing process of the cells a very high tightness in-between the two tubes is not implemented. In the case of the TLK anti-permeation cells the inner tube, chamber A, has been inserted in the outer tube, chamber B, by shrinking it in liquid nitrogen. Before assembly, the outer diameter of the inner tube had the same value with the inner diameter of the outer tube.

During the trials on the two grooves cell it can be considered that the surfaces wetted with tritium and other gases, containing also traces of oxygen and water, may encounter chemical oxidation due to high temperature operation. This can be an explanation for the high tritium removal from the grooves area during the last run with this cell compared with the others cells that have more grooves. This is one of the reasons that surface treatment shall be thoroughly investigated as having high potential for mitigating the tritium permeation.

The experiments carried out at IFIN HH Bukarest showed that an assembly consisting of a double wall pipe covered with a copper layer allow mitigation of tritium permeation due to low permeability of cooper compared with SS. This configuration improves also the heat transfer coefficient in the case of implementation in a heat exchanger component. During each of the experimental campaign, approx. 3.0E+09 Bq of tritium have been fed in the inner chamber of the permeation cell. During the first experimental campaign with a duration of 9 days, and the operation temperature of 250^0 Celsius the amount of tritium that permeates in the outer chamber was of 1.4E+04 Bq. During the second experimental campaign, the operation temperature was increased at 350^0 Celsius, and the amount of tritium permeated in the outer chamber after 30 days operation was of the same order 3.0E+04 Bq. Having in view that the volumes of the inner and outer chambers are quite equal, a reasonable preliminary conclusion is that the investigated barrier can provide a permeation reduction factor in the range $10^4 \div 10^5$.

The feasibility of implementing such concept in an industrial heat exchanger, as is the steam generator of the CANDU reactors, have been investigated. The main technical challenge for implementation of the active barrier between the high tritium content process stream and the secondary stream is the reduction of the heat transfer capacity and the requirement to provide a collecting space for permeate in order to control the tritium permeation and also to recuperate the tritium from this chamber. The proposed design was focused on overcoming the following main challenges:

- Use the double wall tubes configuration for heat transfer;
- Asses the heat transfer reduction;
- Solve the issue of differential dilatation of various components;
- Identify and develop the design and fabrication of the new concept of heat exchanger applying state of the art technologies.

1 The release pathways of tritium in the environment into fission and fusion facilities

In order to improve the safety and reliability of nuclear installations and to reduce the impact of emissions / releases of different effluents on the environment, various evaluations of tritium sources in the in the nuclear fusion and fission power plants have been made.

One important radioactive effluent that was the subject of these evaluations was tritium, since tritium can have significant biological impacts if released to the environment.

The assessment have been focused on the identification of the tritium sources relevant for fusion and fission activities for further developments of tritium permeation barriers. This allowed to set-up of the reference cases both for fusion and fission applications in view of defining the constructive, industrialization requirements for developments of barriers aiming to mitigate the tritium release into the environment.

Hydrogen isotopes barriers are necessary to mitigate the tritium permeation through the structural material of nuclear fusion and fission power plants, which can lead tritium inventory build-up in plant, tritium-contaminated effluents, and high tritium concentrations in work areas, hydrogen isotopes embrittlement of structural metals and more difficult tritium processing.

The assessment of the tritium sources in the fission reactors has been thoroughly carried out based on nuclear reaction where tritium is produced and identification of the pathway of release into the environment.

The tritium term sources have been assessed for the fission reactors, covering:

1.1 PWR / VVER Pressurized Water Reactor

- Tritium is produced directly in the primary heat transport system due to nuclear reactions of bor and lithium (chemical additives for conditioning of cooling agent) and can be released into environment, via steam generator;
- Tritium is produced due to fuel fission reaction but most of it is trapped in fuel elements. For this reason, tritium is released in the primary agent just in case of cladding failure (manufacturing defects, fatigue or impurities) and then into environment, via steam generator.

1.2 BWR Boiling Water Reactor

- Tritium is produced in control rods, sheathed in stainless steel, but have a small contribution by diffusion in the primary heat transport system and further into environment.

1.3 PHWR Pressurized Heavy Water Reactor (CANDU)

- Tritium is produced in the fuel, control rods, burnable poisons and coolant and further from the primary heat transport system can be released in the environment via steam generators.

1.4 GCR Gas Cooled Reactor

- In case of AGR reactors, a fraction of tritium generated in the fuel is diffusing in the cooling gas through the stainless steel sheath and further into environment;
- The tritium atoms exchange with hydrogen in the methane present in the coolant and is finally removed in the coolant driers as tritiated water.
- Reactor vessel.

1.5 High/Very High Temperature Reactor (V/HTR - Fission IV Generation Reactors)

- Tritium generated in the fuel particles by ternary fissions can escape into a primary coolant. In addition, tritium born from 10B and 6Li can pass into the primary coolant.

Some of the tritium can escape outside the coolant by permeation through the components and piping and by leakage with the primary helium coolant. The remaining tritium in the primary coolant permeates through the heat transfer tubes or surfaces of the intermediate heat exchanger and gets mixed in with the secondary coolant.

- In the secondary loop, some of the tritium is removed by the purification system or escapes outside, just as tritium behaves in the primary loop. The remainder of the tritium in the secondary coolant permeates through heat transfer surfaces and gets mixed into the tertiary coolant from where can be released into environment via steam generator.
- Transportation of tritium into the tertiary coolant is the same as for the secondary coolant.

1.6 Sodium-cooled Fast Reactors (SFR - Fission IV Generation Reactors)

- Tritium generated in the reactor core is released to the primary sodium coolant. From the primary cooling circuit, tritium may permeate through the stainless-steel containment vessels and piping into the surrounding nitrogen cell, permeate through the intermediate heat exchanger tubes into the secondary circuit, then is it removed by the primary cold trap, decay naturally to He-3 and escape by leakage from the primary cover gas.
- Tritium that reaches the secondary circuit through the intermediate heat exchanger may permeate through the secondary sodium containment walls into the surrounding air cells, permeate through the walls of the steam generator tubes into the water/steam system and escape by leakage from the secondary system cover gas into environment.

1.7 Molten Salt Reactors (*Fission IV Generation Reactors)*

- The vast majority of tritium production will occur in the salt.

1.8 Lead-cooled Fast Reactors (LFR - Fission IV Generation Reactors)

- In case of stainless-steel cladding, tritium can escape through defects and, even more important, by permeation the elemental tritium is released into the primary coolant.

The assessment for nuclear fusion power plants was based on Tokamak option, the magnetic confinement devices with specific characteristics from the ITER and EU-DEMO projects. For such facilities the reduction of tritium source terms remains to be a major task in the development of fusion technology and three areas with significant potentials for improvements have been identified:

- Reduction of tritium inventories in the inner fuel cycle, in the breeder blanket loops, and in the Hot Cell;
- Minimization of tritium migration from primary containments into outer confinement volumes;
- Optimization of detritiation and decontamination techniques.

In fusion power reactors tritium migrating into outer confinement barriers through permeation is responsible for major source terms, eventually leading to increased effluents and releases. The development of permeation barriers for nuclear fusion is therefore a key in the course of making fusion power feasible and acceptable.

Subjects of major concern for fusion power plants, but not limited to this technology, are the tritium source terms in the cooling loops. The cooling loops of a nuclear fusion power reactor have the potential to be accountable for one of the more severe source terms eventually causing tritium effluents and releases into the environment. Restricting tritium permeation into primary cooling fluids has its limits; keeping the driving force low for tritium permeation into the secondary cooling loops is eventually asking for continuous detritiation of the primary cooling fluids.

The assessment of the tritium term sources both for fission and fusion provides a sound data base for developments of barriers aiming to mitigate the tritium release into the environment. In order to mitigate the tritium release into environment and tritium inventory in the nuclear power plants,

hydrogen isotopes barriers are necessary to kinetically limit the achievement of isotopic thermodynamic equilibrium through hermetic boundaries.

2 The concept of the Experimental Active Barrier

In the frame of the project TRANSAT, an active barrier to mitigate permeation of tritium from a potential breeding blanket into the environment through a steam generator or heat exchanger was developed inside the Tritium Laboratory Karlsruhe.

The main purpose of the project is to design and manufacture an experimental set-up in view of the validation of the principle of an active barrier against tritium permeation, mainly to mitigate permeation of tritium from a potential tritium breeding area into the environment through a steam generator or heat exchanger.

The considered experimental model anti-permeation cell consist of two chambers, the inner and the outer chamber, that are separated by an interspace where permeated tritium shall be collected and purged out in order to avoid further permeation. In the figure 1, a sketch of the principle of an active barrier against tritium permeation is shown. This consists of the inner tube/chamber A, the outer tube/chamber B and the outer envelope C.

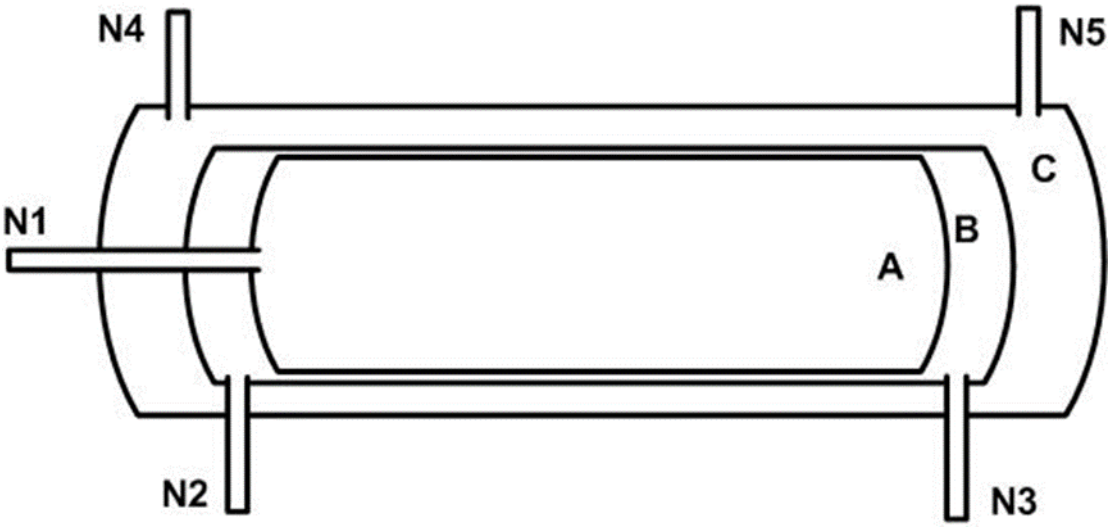

Figure 2-1 ***Anti-permeation cell principle***

Chamber A

It has the role to accommodate the supply of tritiated gas (helium, nitrogen, argon) used for permeation evaluation and finally tritium accountancy. From the constructive point of view, it is the reference surface through which the tritium permeation takes place towards the enclosures that interface with the external environment. In the experimental set-up the length of the permeation surface has 450 mm and an outer diameter of 16 mm was considered relevant for the tritium permeation assessment;

Chamber B

The main role of this chamber is to collect the tritium that permeates from the Chamber A;

In between the chamber A and chamber B, gaps for tritium trapping and recovery shall be provided. Therefore, the Chamber B which in fact can be considered as an enclosure of Chamber A, nozzles that allow tritium recovery and accountancy from the primary enclosure (Chamber A) shall be provided (N2 and N3 from the Figure 2-1). The tritium recovery can be realized by vacuum or by purging with gas such as helium or hydrogen.

Chamber C

It constitutes the tritium recovery enclosure that permeates from the feeding area, respectively Chamber A, through the secondary wall enclosure (Chamber B). In fact, in this chamber the amount of tritium that escape from the two walls (chamber A and chamber B) having gaps for tritium recovery in between shall be measured. The chamber C is also provided with nozzles (N4

and N5 from the Figure 2-1) that allow continuous or discontinuous measurement of the amount of tritium that permeates. Continuous recovery is to be done by purging the chamber with a fluid: helium, nitrogen, argon. On the chamber C, the electric heaters and the temperature measurements are installed.

2.1 The design of the anti-permeation cell based on active barrier concept

The operation and the design parameters considered for the development of the components of the anti-permeation cell are the followings:

Table 2-1 The operation and design parameters of anti-permeation, active barrier concept

	Chamber A	Chamber B	Chamber C
Material	SS 316L	SS 316L	SS 316L
Outer diameter [mm]	16	20	33.7
Wall thickness [mm]	1.5	2	3.5
Max. operating temperature [°C]	450	450	450
Max Operating pressure bar(g)	70	70	70

In order to collect the tritium permeated from the inner chamber A, longitudinal grooves on the exterior surface of chamber A have been realized. The cross section of the grooves has been calculated and realized in such way that the general heat transfer coefficient from the chambers A and B to the outer envelope C do not decrease with more than 10%.

2.1.1 Calculation of the grooves cross section and heat transfer calculation

The purpose of the calculations was to establish the thickness of the grooves and generally the cross section, aiming that the general heat transfer coefficient between the chambers A and B and the outer chamber C does not decrease with more than 10%.

The reference configuration of the longitudinal grooves manufactured on the outside/exterior surface of the Chamber A, and their size is shown in Figure 2-2:

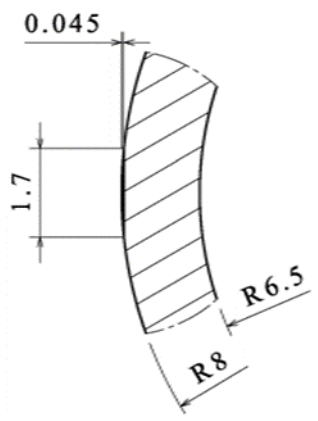

Figure 2-2 ***Collecting channel dimension***

According to calculations up to 8 longitudinal grooves can be realized on the exterior surface of chamber A and keeping a decrease below 10% on the heat transfer coefficient between Chamber A-chamber B and the Chamber C. Therefore, four experimental permeation cells have been manufactured with the following characteristics:

- Permeation cell 1: 2 x longitudinal grooves of 0.045 mm thickness and 1.7 mm width;
- Permeation cell 2: 4 x longitudinal grooves of 0.045 mm thickness and 1.7 mm width;
- Permeation cell 3: 6 x longitudinal grooves of 0.045 mm thickness and 1.7 mm width;
- Permeation cell 4: 8 x longitudinal grooves of 0.045 mm thickness and 1.7 mm width;

All grooves have been radially uniform distributed as shown in Figure 2-3.

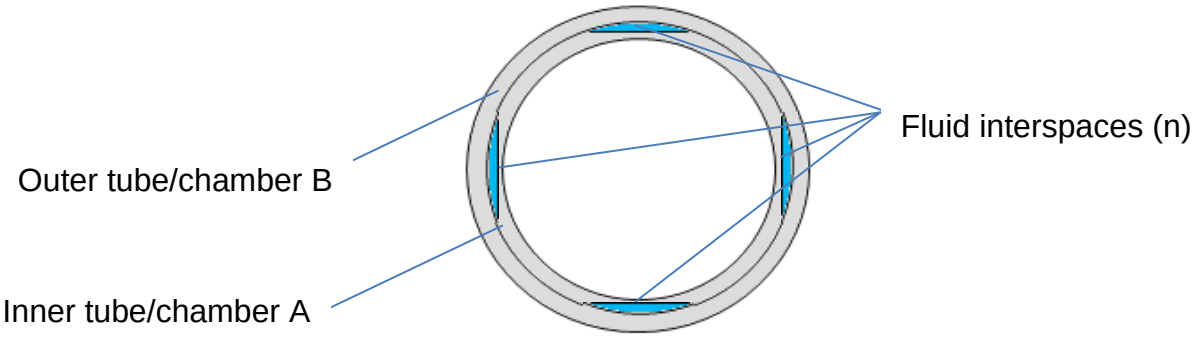

Figure 2-3 ***Grooves distributions – 4 collecting grooves configuration***

All four permeation cells have been designed and manufactured having the same total surface exposed to tritium permeation, corresponding to a tube length of 450mm as shown in Figure 2-4.

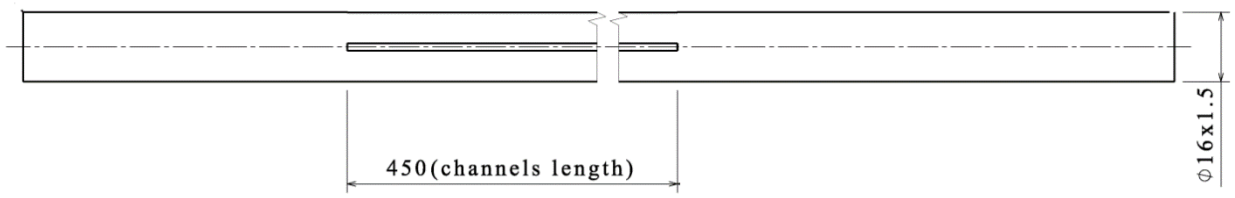

Figure 2-4 ***Collecting groove on the outer surface of Chamber A***

2.2 Mechanical design of the anti-permeation cell

From the mechanical design point of view, the anti-permeation cell has been designed having the operation parameters as shown in Table 2-1 and considering to use during the manufacturing process only conventional technology and materials. Therefore, the following materials have been used:

- Chamber A – Tubing, SS316L, 16x1.5 mm
- Chamber B – Tubing SS316L, 20x2.0 mm
- Chamber C – Pipe SS316L, 33.7*3.5 mm
- Nozzles – SS 316L round bar, D=30 mm
- Connections – female VCR1/4” – SS316L

For each individual chamber the mechanical calculation has been done with Visual Vessel Design 2016 software, according to EN134445-2014, issue 1 and using the parameters from Table 2-2.

Table 2-2 The main design parameters for each chamber of the anti-permeation cells:

	Chamber A	**Chamber B**	**Chamber C**
Material	SA-213 Gr. TP 316L, seamless tube	SA-213 Gr. TP 316L, seamless tube	EN 10216-5, 2013, 1.4404 (SS 316L) seamless tube
Outer diameter [mm]	16	20	33.7
Wall thickness [mm]	1.5	2.0	3.5
Design temperature [°C]	480	480	480
Internal design pressure bar(g)	78	78	78
External design pressure bar(g)	78	78	1
Negative tolerance [mm]	0.1	0.1	0.44

The general assembly drawing of the anti-permeation cell based on active barrier concept is shown in Figure 2-5.

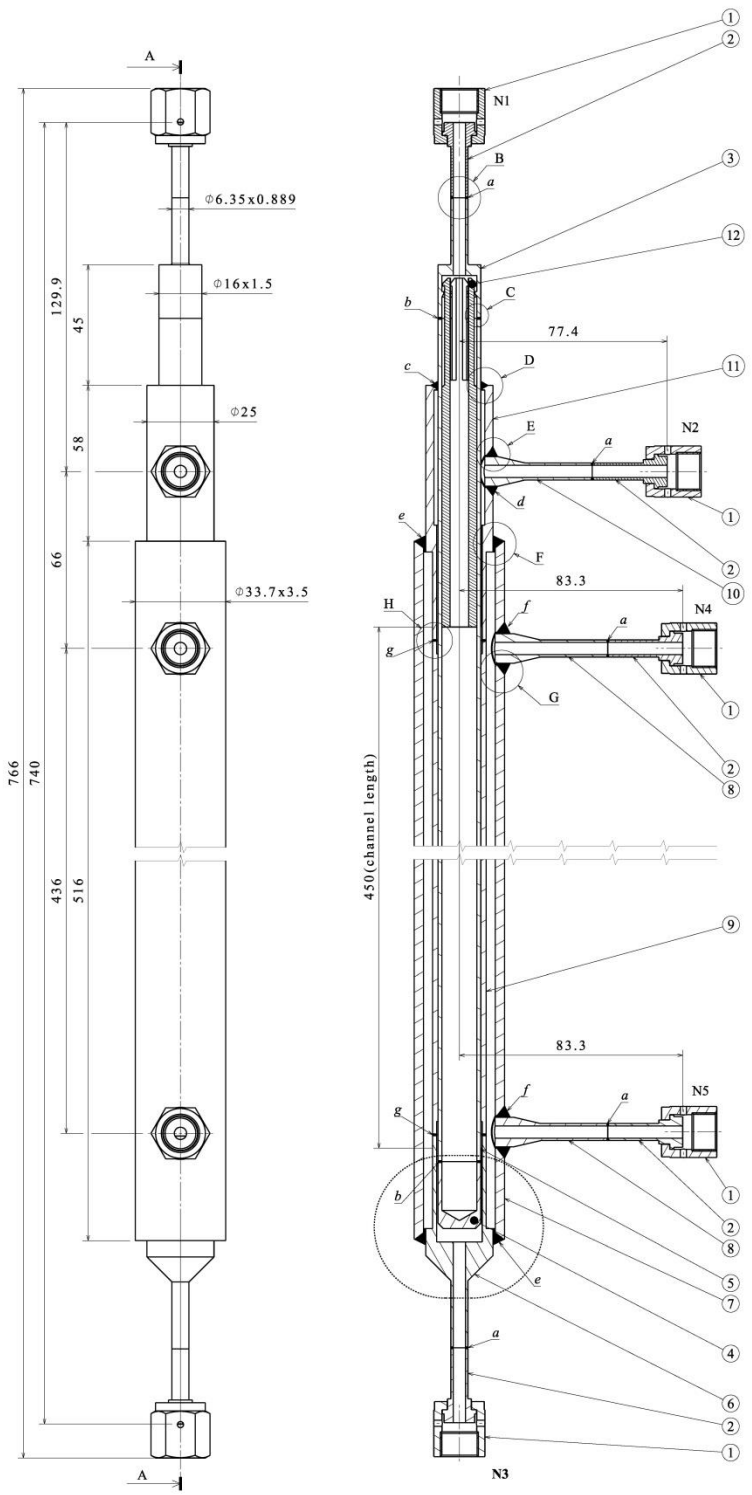

Figure 2-5 ***Experimental anti-permeation cell Assembly drawing***

Where:

N1 – Chamber A inlet

N2 – Chamber B collecting nozzle

N3- Chamber B purging inlet

N4 - Chamber C (envelope) purging inlet

N5 – Chamber C (envelope) purging outlet

The calculation results show that the maximum stress diagram on the walls, are below the maximum admissible stress limit and allows operation in safe condition. The calculated maximum stresses are showed in the following figures:

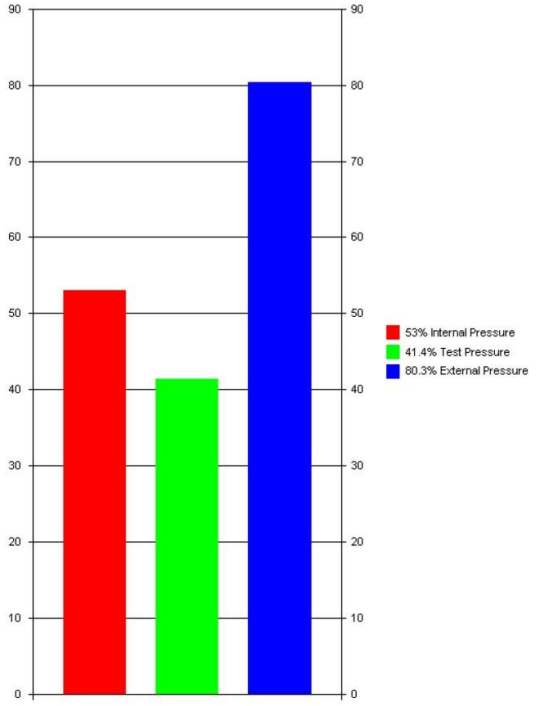

Figure 2-6 ***Utilization chart - Chamber A***

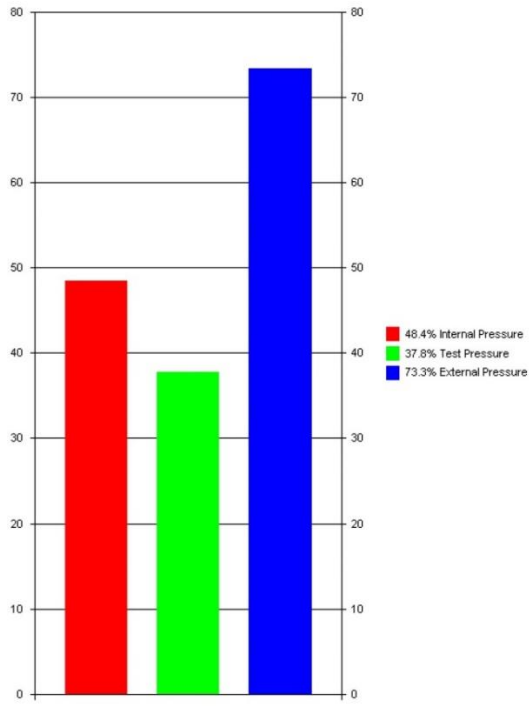

Figure 2-7 ***Utilization chart - Chamber B***

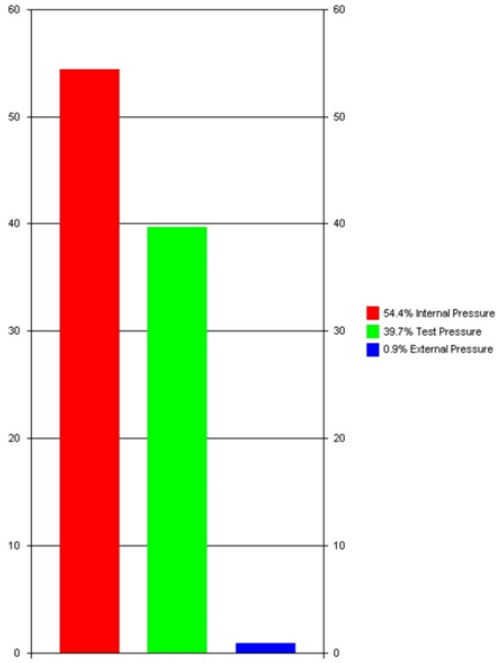

Figure 2-8 ***Utilization chart - Chamber C***

3 Development of the experimental facility at KIT-TLK

The assessment of the performances of the four anti-permeation cells based on the active barrier concept have been carried out at Tritium Laboratory from KIT. Therefore, a dedicated glove box has been allocated for the experimental activities and the related activities for the connection of this glove box in the TLK infrastructure have been carried out. The main activities have been focussed on the followings:

- Build inside the glove box the entire frames for the installation of the experimental rigs;
- Expand the electrical and gas feedthroughs connections for running the experiments;
- Connect the parts of the experimental rigs to the tritium exhaust system of the TLK;
- Design and manufacture of the tritium feeding system;
- Preparation of the entire infrastructure for tritium accountancy, including tritiated water de loading from the experimental rig parts.

In Figure 3-1, the glove box where the experimental rig was installed is shown.

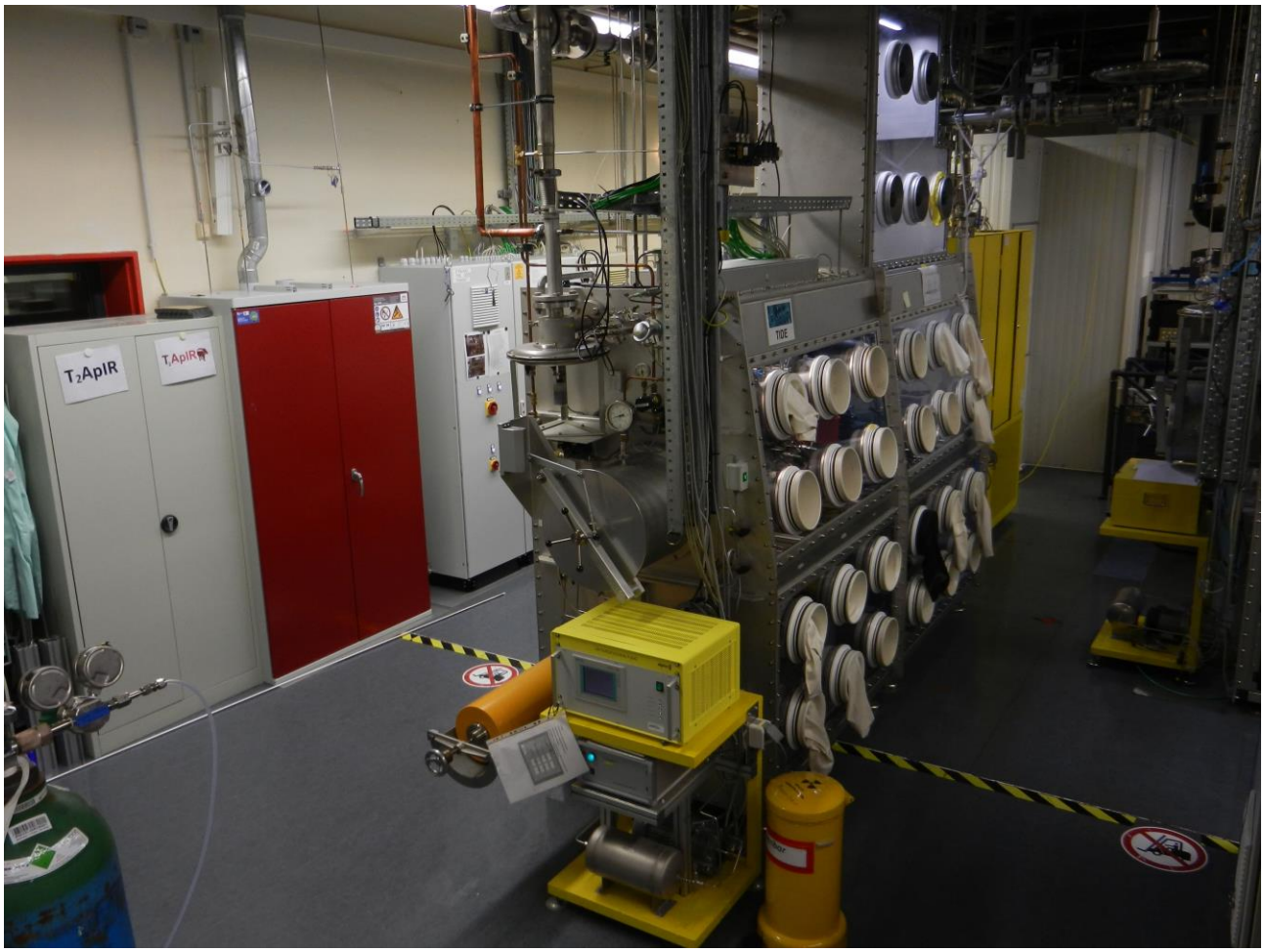

Figure 3-1 TLK glove box that accommodate the experimental set-up

In addition to the glove box preparation a dedicated electrical cabinet have been manufactured and installed that allows fully automated operation of the experimental rig around the clock. This was necessary in order to allow long time operation without operator supervision. All operation parameters have been collected during the experimental campaigns and are available for detailed evaluation. In Figure 3-2. The electrical cabinet is shown.

Figure 3-2 The electrical cabinet of the TLK experimental set-up

The installation of one of the anti-permeation cells inside the glove box is shown in Figure 3-3.

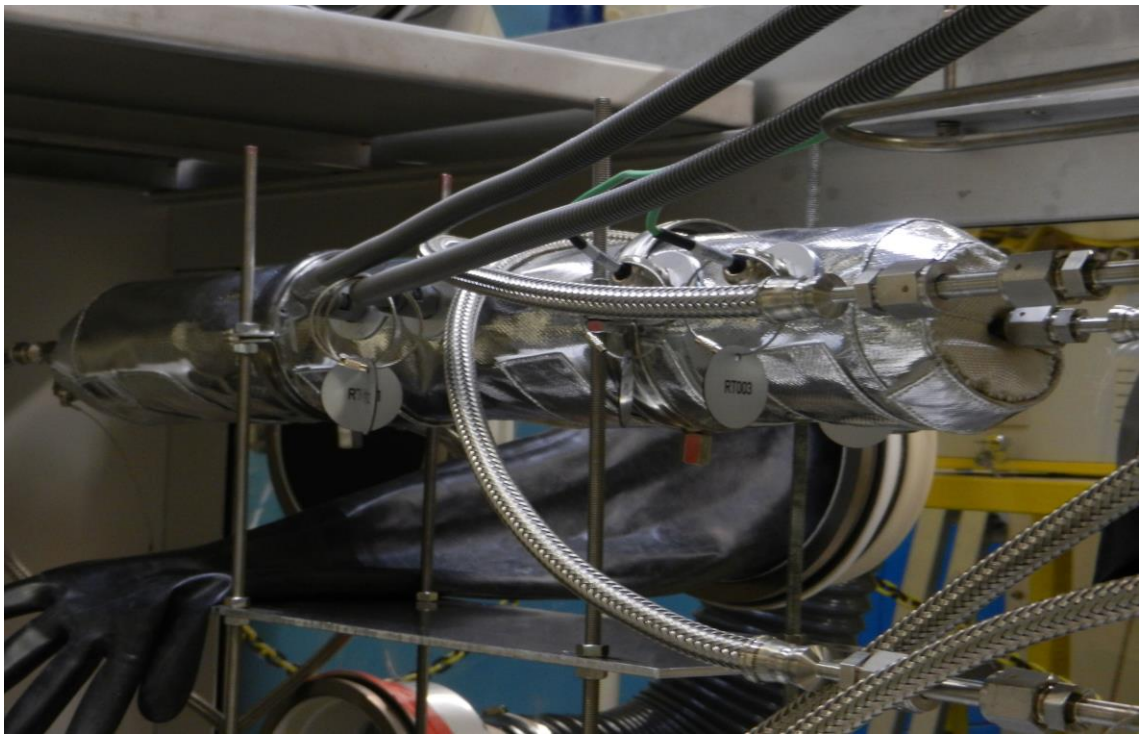

Figure 3-3 Installation of one of the four anti-permeation cells inside the glove-box

Several gas mixtures containing helium, nitrogen and hydrogen have been used for purging the anti-permeation cells grooves and therefore a dedicated gas cabinet has been installed with the entire infrastructure for controlling the gas composition, as shown in Figure 3-4.

Figure 3-4 The gas cabinet for purging the anti-permeation cells grooves

3.1 The PFD of the TLK experimental facility; operation modes

The TLK experimental set-up have been developed aiming to perform the followings:

- Preparation of a various gas compositions containing certain amount of tritium;
- Feeding of the anti-permeation cells (chamber A) with a certain amount of tritium;
- Purging at various flow-rates the grooves, in between the camber A and chamber B, with a certain gas composition containing helium, nitrogen and hydrogen;
- Oxidation of the purging gas from the grooves area and trapping the tritiated water in view of tritium accountancy;
- Purging the chamber/enclosure C with a certain gas composition containing helium, nitrogen and hydrogen;
- Oxidation of the purging gas from the enclosure area and trapping the tritiated water in view of tritium accountancy;
- Continuously monitoring of tritium content in the purge gas using dedicated ionization chambers;
- Safe discharging of the tritium containing gases into the TLK tritium infrastructure.

The PFD of the TLK experimental set-up is shown in Figure 3-5. The normal operation of the experimental set-up is as following:

- The tritiated gas, mixture of helium and tritium, is fed in the chamber A, as shown with the red line from the PFD from Figure 3-5. After gas feeding, the pressure inside the chamber A was topped up with helium in such way that after heating at 450 Celsius the final pressure in chamber A was stabilized at 70 bar (g).
- There are two separated branches, shown in the bottom-left side of the PFD, that consist of several valves and two flow controllers which allow purging with helium and hydrogen of the grooves area and the chamber C of the anti-permeation cells. The configuration of the experimental set-up allows also mixing of the two branches and gives high flexibility in the operation.
- Four branches, two branches on each purging stream, are implemented in the experimental set-up with the aim to oxidize the tritium and hydrogen and to adsorb the tritiated water on molecular sieve beds. The aim is to collect the entire amount of tritium that is purged in the form of tritiated water and after desorption of the water from the molecular sieve beds to measure the total amount of tritium removed by purging. Two ranches are available for each purging stream, one branch is in oxidation and adsorption phase and the other is in the regeneration phase, meaning catalyst regeneration and water desorption from the molecular sieve bed. In Figures 3-6 and 3-7 are shown the four oxidizers and molecular sieve beds of the four branches installed in the glove box.

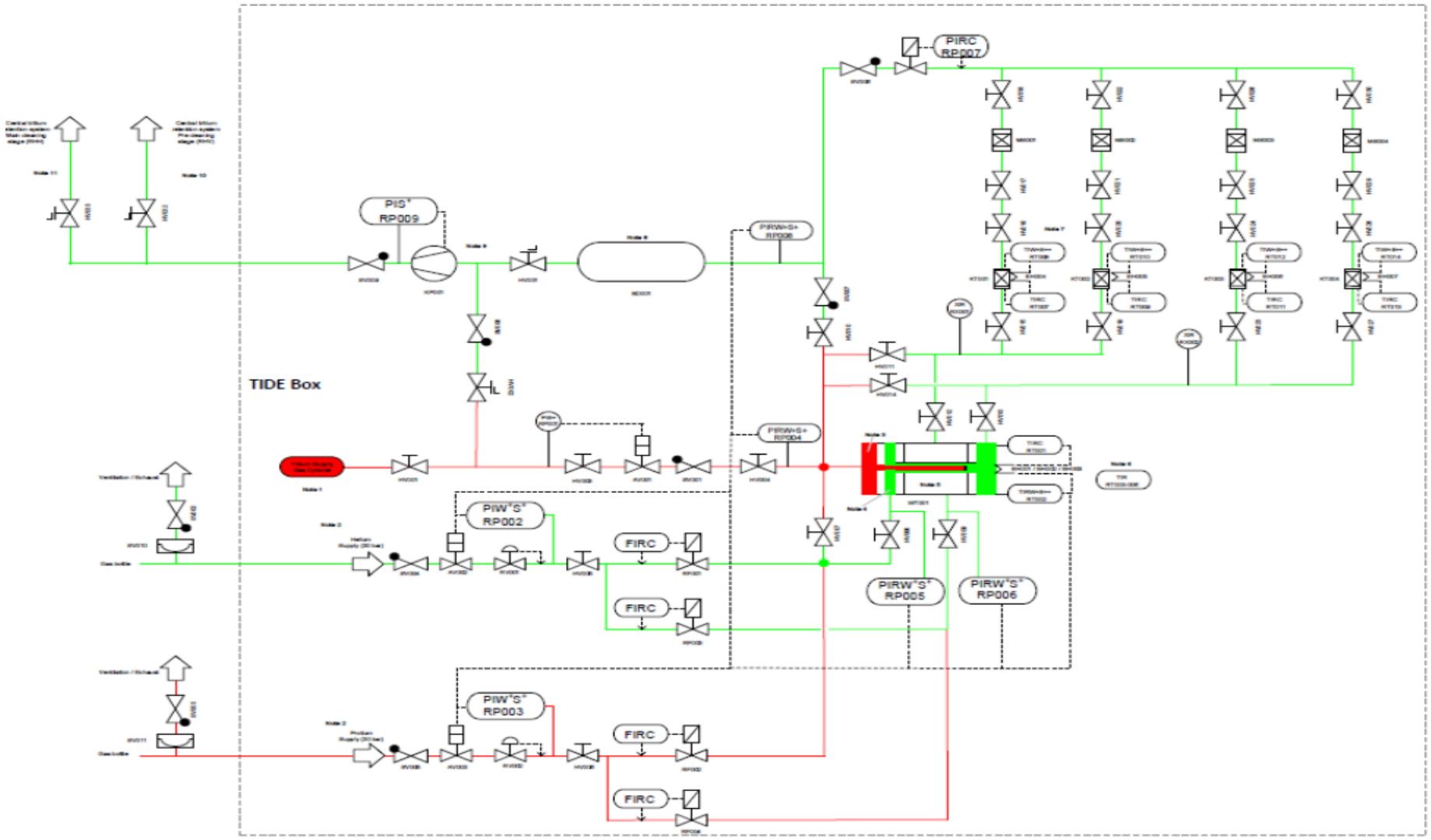

Figure 3-5 The Process Flow Diagram of the TLK experimental set-up

This project has received funding from the Euratom research and training programme 2014-2018 under the grant agreement n°754586. The content in this report reflects only the views of the authors. The European Commission is not responsible for any use that may be made of the information it contains.

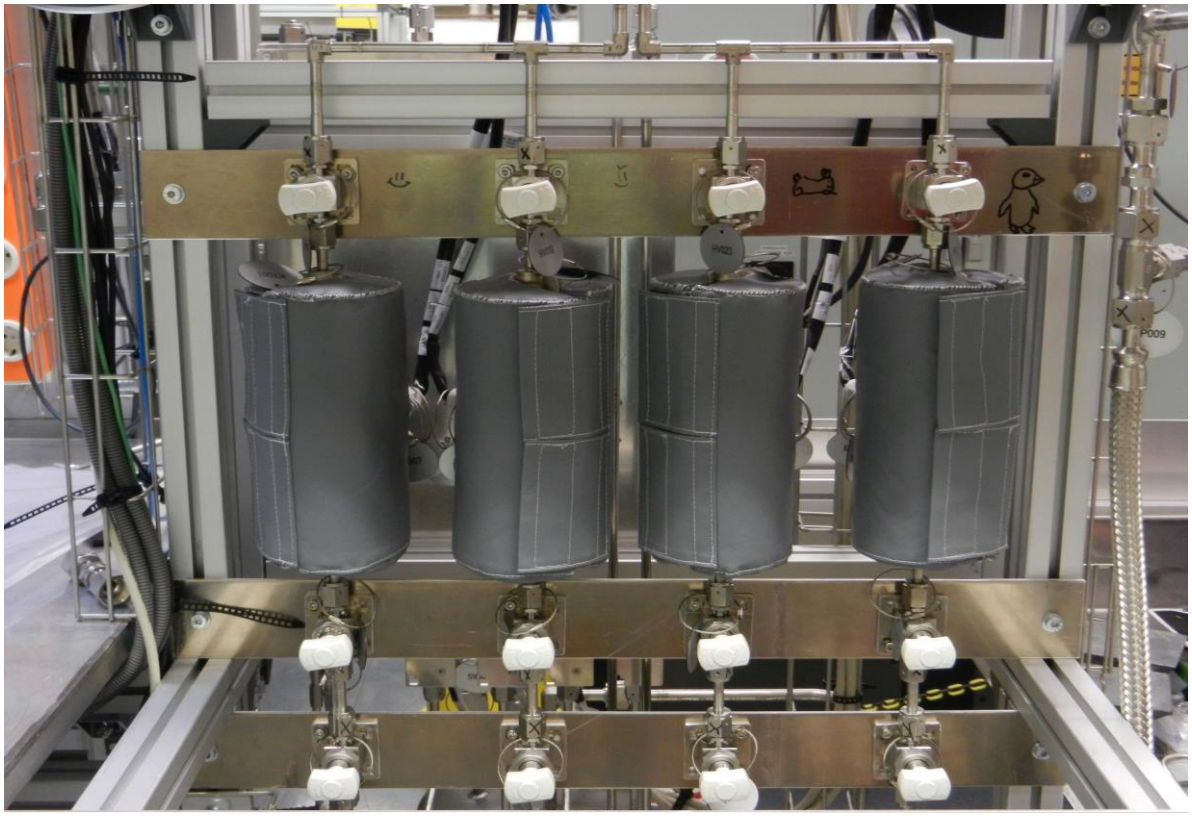

Figure 3-6 The four oxidizers of the experimental set-up

Figure 3-7 The four molecular sieve beds of the experimental set-up

This project has received funding from the Euratom research and training programme 2014-2018 under the grant agreement n°754586. The content in this report reflects only the views of the authors. The European Commission is not responsible for any use that may be made of the information it contains.

- The tritium activity is measured on each purging stream, upfront of the two oxidation and adsorption beds, by ionization chambers. These measurements show the dynamic of tritium trapped in the grooves and also of the tritium escaping from the active barrier. A picture of the two electrical devices of the ionization chambers, RX001 and RX002, installed in the electrical cabinet is shown in Figure 3-8.

Figure 3-8 The electrical devices of the two ionization chambers

- In order to perform the tritium mass balance for each measurement, the amount of tritium that remain inside the feeding chamber A, is measured at the end of the experiment. Therefore, during several times the chamber A is flashed with hydrogen and the removed mixture helium-hydrogen–tritium is oxidized, the water is trapped and the amount of tritium is measured in the collected water by liquid scintillation technics.
- The HAZOP study of the entire PFD has been conducted and the configuration has been enhanced in order to minimize the operation risks associated with tritium.

3.2 Installation and commissioning of the experimental set-up

The commissioning and functional testing was performed after setting up the rig, in order to guarantee the save and reliable operation of the whole system in accordance to the TLK licence and general safety regulations.

The experimental set-up can be subdivided into 4 sections:

- *Gas supply:*

Tritium is fed through gas cylinders at 1 bar (abs) pressure while helium and hydrogen are fed at a maximum of 28 bar (abs).

- *Experiment section test chamber (=heat exchanger mock-up):*

Tritium is injected into a central chamber, while grooves are permanently purged using a mixture of He/H_2 to prevent migration of tritium into the jacket- chamber C. The jacket is purged to quantify tritium migration from the central chamber A to the jacket during the operation at 450°C.

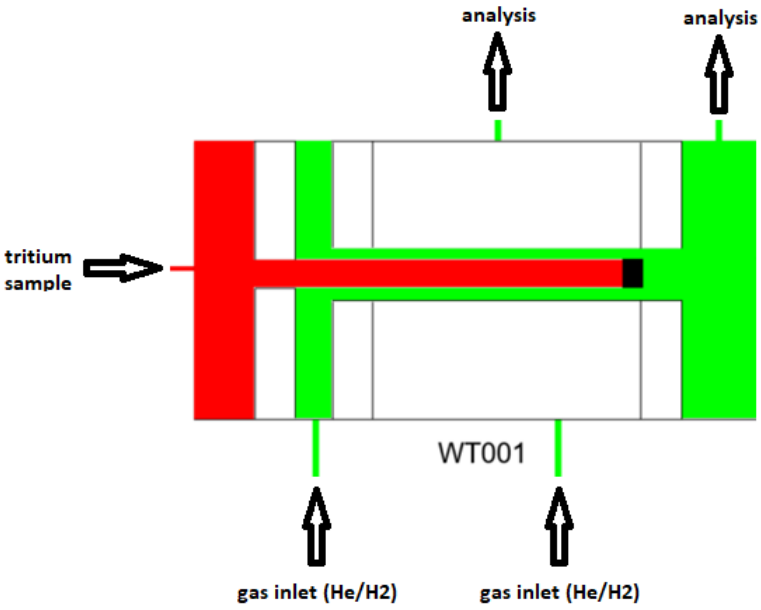

- *Analytical branch:*

Four parallel branches are available to oxidise tritium to HTO using carulite reactors and molecular sieves for trapping.

- *Exhaust branch:*

The exhaust branch provides evacuation and purge of waste gases into the TLK central tritium retention system.

3.2.1 Functional testing

Functional testing proofs the functionality of all components of the first and secondary confinement, as well as the detailed functionality of all process components:

- *Proof of leak rate:*

An integral leak rate of $<10^{-8}$ mbar l s^{-1} was proven after every individual component was qualified to $<10^{-8}$ mbar l s^{-1}.

- *Pressure test:*

All components have been tested at 1.2x the rated pressure using inert gas.

- *Electrical safety:*

All electrical components were tested in accordance to the technical requirements, EMSR-specification and the TLK technical terms of acceptance. This included (list not comprehensive):

- Grounding
- Contact protection
- Insulation resistance
- Correct markings and labels on electrical field wiring
- Compliance of technical documentation with electrical equipment
- Function of main switches and emergency stop switches

- *Loop-Check:*

The loop check includes the proof of correct communication of measurement in the field and the local control system in the electrical cabinet. Furthermore, the complete wiring between components, including the feedback from actuators is checked. A plausibility check of all signals has been conducted.

- *Test of control software (Controllers, set points, warnings, trips, interlocks):*

-Values and the correct triggering of warnings and interlocks (simulated pressures & temperatures)

-The condition of the actuated component after triggering an interlock

-Comparison of results of the loop check with the safety strategy outlined in the plant safety description

- *Functional testing of all process components:*

-Accessibility, maintainability, correct installation, compliance to documentation, correct function, and correct feedback was checked for 34 manual valves, 3 automatic valves, 2 membrane pressure controllers and 10 safety valves, the vacuum pump and all electrical heaters.

-Accessibility, maintainability, correct installation, and compliance to documentation, correct function, correct feedback and plausible measuring values were checked for 8 pressure measurements, 12 temperature measurement, 2 ionisation chambers, 4 mass flow controllers and an electronic pressure controller.

3.2.2 Cold commissioning

The complete rig was tested without tritium at nominal operation conditions for several times. All components have been examined under operational conditions using He and hydrogen:

- Trial operation of all branches with He to proof capacity of supply- & experimental tubing and components, as well as capacity of the vacuum pump and the exhaust section;
- Trial operation of the carulite reactors using hydrogen at 180°C. The conversion of hydrogen was observed; water was trapped quantitatively on the molecular sieves. Regeneration of carulite reactors and molecular sieves was proven;
- Maintainability and accessibility of carulite reactors and molecular sieves was proven by repeated exchange of the component;
- Trial experiments using hydrogen and helium to proof the correct interaction of all process components and operations. Several trial experiments have been conducted aiming to familiarise the operators with the experiment.

After finishing the cold commissioning, the first tritium experiment has been performed, the data have been collected and used to define the real operation conditions of the measurements.

4 Experimental results from the KIT-TLK experimental facility

Following the experimental procedure presented in the previous chapters, several experimental campaigns have been carried out aiming to quantify the amount of tritium trapped and removed through the grooves versus the amount of tritium permeated in the outer chamber/jacket C. The four anti-permeation cells have been tested in as much was possible similar conditions as far as the amount of tritium fed and purge gas flow rate are concerned. The same operation conditions for the oxidation, trapping, removal and liquid scintillation operation conditions have been applied for all measuring campaigns. Therefore, all anti-permeation cells have been operated at 450°C, 70 bar and the fed tritium inventory at the beginning of each experiment was ~1E9Bq with some exceptions when memory effect was assessed. In the following, the experimental results related to all four anti-permeation cells are presented.

4.1 Experimental results for the anti-permeation cell with two grooves

For this configuration several campaigns have been carried out aiming to define the operation conditions that gives high confidence and accuracy related to the tritium mass balance. In addition,

it was assessed the most convenient operation mode, meaning choosing between the pressurized mode of the grooves area followed by area flashing versus continuously purge gas. In addition, the controlling of the purge gas was adjusted in order to provide the lowest flow rate through the grooves that avoid challenge the oxidation and adsorption capacity of the beds during the continuously operation along one week. In the Table 4-1, the experimental results for the two grooves configuration are presented.

Table 4-1 The experimental results related to the anti-permeation cell with two grooves

Exp. Nr.	**1**	**2**	**3**
HT Feed (Bq)	1,99E+08	1,27E+08	1,32E+09
Gap LSC (Bq)	3,00E+08	3,97E+08	8,62E+08
Jacket LSC (Bq)	4,50E+07	3,80E+07	1,76E+06
Central LSC (Bq)	1,42E+08	5,65E+07	7,60E+06
Summ End	4,87E+08	4,91E+08	8,71E+08
Exp. Type	Static	Static	Dynamic
No. **Gaps**	2 **Gaps**	2 **Gaps**	2 **Gaps**
Ratio gap/jacket	**6,67E+00**	**1,05E+01**	**4,90E+02**

During the experiment 1, the grooves area has been pressurized with helium for 48 hours and during the following six hours the area has been purged with hydrogen at a flow rate of approx. 5l/h.

In the experiment 2, the grooves area has been pressurized with helium for 24 hours and during the following six hours the area has been purged with hydrogen at a flow rate of approx. 5l/h.

Taking as reference the experimental results from the experiments 1 and 2, in the experiment 3 the grooves area has been continuously purged at the flow rate of 1l/h with a mixture helium-hydrogen that contains 10% hydrogen.

4.2 The experimental results for the anti-permeation cell with four grooves

The experiments 4 and 5 have been carried out in similar conditions as experiment 3 related to the two grooves configuration. The operation conditions are as follow: 450^0 Celsius the operation temperature, 70 bar (g) in the feeding chamber A, 2 bars (g) in the grooves area and the purging flow rate in the grooves area and jacket area – chamber C of 1l/h with helium containing 10% hydrogen. The experimental results are shown in Table 4-2.

Table 4-2 The experimental results related to the anti-permeation cell with four grooves

Exp. Nr.	**4**	**5**

Amount of HT fed in chamber A (Bq)	1.13E+09	1.00E+09
Amount of tritium collected in the grooves (Bq)	6.93E+08	4.18E+08
Amount of tritium permeated in the Jacket- chamber C (Bq)	1.43E+06	2.01E+06
Amount of tritium remained in the feeding chamber after 1 week (Bq)	1.41E+07	1.05E+07
Amount of tritium at the end of the experiment (chamber A + grooves + jacket)	7.09E+08	4.30E+08
Operation mode	Continuously purging (1l/h)	Continuously purging (1l/h)
Ratio tritium collected grooves/jacket	**4.87E+02**	**2.07E+02**

4.3 Experimental results for the anti-permeation cell with six grooves

The experiments 6 and 7, related to the six grooves configuration, have been carried out in similar experimental conditions as those with four grooves configuration meaning: 450^0 Celsius the operation temperature, 70 bar (g) in the feeding chamber A, 2 bars (g) in the grooves area and the purging flow rate in the grooves area and jacket area – chamber C of 1l/h with helium containing 10% hydrogen. The experimental results are shown in Table 4-3.

Table 4-3 The experimental results related to the anti-permeation cell with six grooves

Exp. Nr.	**6**	**7**
HT Feed in chamber A (Bq)	1.01E+09	9.56E+08
Amount of tritium collected in the grooves (Bq)	6.14E+08	6.55E+08
Amount of tritium permeated in the Jacket- chamber C (Bq)	1.91E+06	2.24E+06
Amount of tritium remained in the feeding chamber after 1 week (Bq)	2.00E+07	1.75E+07
Amount of tritium at the end of the experiment (chamber A + grooves + jacket)	6.36E+08	6.75E+08
Operation mode	Continuously purging (1l/h)	Continuously purging (1l/h)

Ratio tritium collected grooves/jacket	**3.21E+02**	**2.93E+02**

4.4 Experimental results for the anti-permeation cell with eight grooves

In Table 4-4, the experimental results related to the eight grooves configuration are shown. The data corresponds to the operation conditions that have been used during the experiments from 4 to 7, respectively: 450^0 Celsius the operation temperature, 70 bar (g) in the feeding chamber A, 2 bars (g) in the grooves area and the purging flow rate in the grooves area and jacket area – chamber C of 1l/h with helium containing 10% hydrogen.

Table 4-4 The experimental results related to the anti-permeation cell with eight grooves

Exp. Nr.	**8**	**9**
HT Feed in chamber A (Bq)	9.81E+08	1.04E+09
Amount of tritium collected in the grooves (Bq)	8.30E+08	8.59E+08
Amount of tritium permeated in the Jacket- chamber C (Bq)	3.80E+06	1.89E+06
Amount of tritium remained in the feeding chamber after 1 week (Bq)	1.49E+07	6.54E+06
Amount of tritium at the end of the experiment (chamber A + grooves + jacket)	8.49E+08	8.68E+08
Operation mode	Continuously purging (1l/h)	Continuously purging (1l/h)
Ratio tritium collected grooves/jacket	**2.18E+02**	**4.55E+02**

4.5 Summary of the experimental results related to the active barrier concept

The anti-permeation cell with two grooves have been tested several times in various conditions aiming to define the most suitable operation conditions and to get the operators familiar with the facility. Therefore, the amounts of tritium collected in the grooves area and in the jacket have large variations. One of the issues that was tested with the two grooves anti-permeation cell was related to the selection of the operation of the grooves area: pressurizing the area with hydrogen/helium followed by flashing with hydrogen/helium versus continuously purging with hydrogen/helium gas. During these trials it can be considered that the surfaces wetted with tritium and other gases, containing also traces of oxygen and water, may encounter chemical oxidation due to high temperature operation. Therefore, a direct comparison of the data collected for the two grooves cell with the followings tested cells is not straight forward at this stage.

In the Table 4-5, the means values of the ratio between the amounts of tritium collected in the grooves area to the amounts of tritium permeated in the jackets of the four cells are shown.

Table 4-5 Summary of the anti-permeation cells performances

Type of cell	2 grooves	4 grooves	6 grooves	8 grooves
Ratio tritium collected grooves/jacket	4.90E+02	3.47E+02	3.07E+02	3.37E+02

The measurements carried out at TLK have proven that the anti-permeation cells based on active barrier concept is a suitable option for mitigation the tritium permeation. The amount of tritium that can be removed after the permeation through the first wall is at least two order of magnitude higher that tritium that permeates the second wall. It seems that the number of grooves doesn't play a significant role in the efficiency of the concept in the case that during the manufacturing process of the cells a very high tightness in-between the two tubes is not implemented. In the case of the TLK anti-permeation cells the inner tube, chamber A, has been inserted in the outer tube, chamber B, by shrinking it in liquid nitrogen. Before assembly, the outer diameter of the inner tube had the same value with the inner diameter of the outer tube.

5 Experimental results from the IFIN HH experimental facility

The main scope of the experiments carried out at IFIN HH was to assess the feasibility and preliminary performances of a barrier based on copper layer that can complement the coating technics that are under investigation at ENEA Brasimone, also part of the TRANSAT project.

5.1 Design characteristics of the permeation cell investigated at IFIN HH

The principle of the permeation barrier developed at IFIN HH is schematically shown in Figure 5-1. The permeation cell consists of four layers:

- An inner tube where tritium will be fed; the thickness of the inner tube is 1.0 mm
- The inner tube is enclosed by a second tube and a gap of approx. 0.01- 0.1 mm is realized in between the two tubes; the thickness of the second tube is of 1.5 mm;
- The outer surface of the second tube is covered with a copper layer that is 1.0 mm thick. In between the second tube and the copper tube it is assumed that not gap exist as the second tube was inserted in the cooper tube by shrinking it at 77K.
- The three layers are enclosed in an external jacket that is heated at temperatures up to 350^0 Celsius

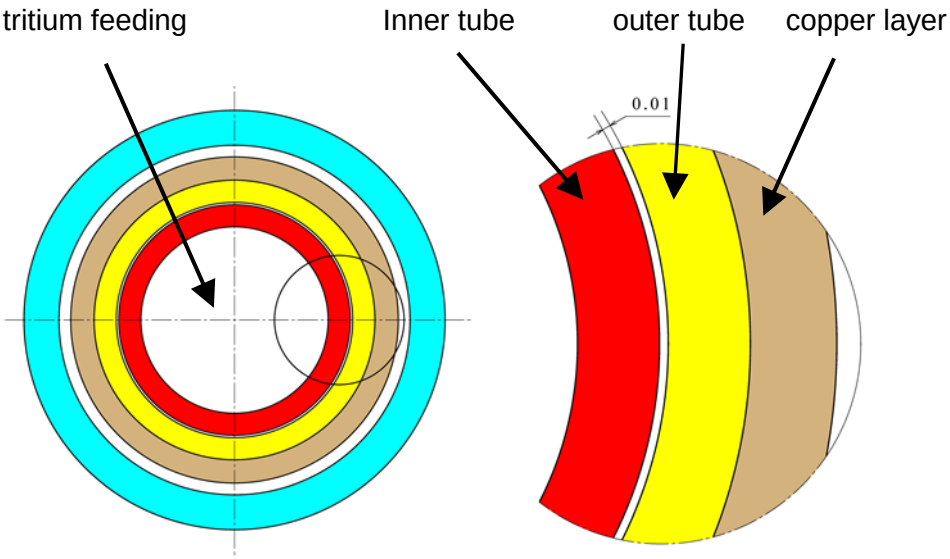

Figure 5-1 The principle of the permeation barrier at IFIN HH

The permeation cell is provided with nozzles that allow measuring of tritium content in various locations such as:

- Amount of tritium that remain in the inner tube following a certain permeation time;
- Amount of tritium that permeates in the gap in between the inner tube and the second tube; This measurement gives information about the dynamic of tritium permeation through a certain thickness of the construction material SS316L.
- Measurement of tritium that permeates through the copper layer in the outer enclosure.

The general assembly drawing of the permeation cell investigated at IFIN HH is shown in Figure 5-2.

After manufacturing of the permeation cell the volume of the inner and intermediate chambers was determined by the picnometric method and the following figures have been found:

- 19.689 ± 0.064 g (ml) for inner chamber
- 5.202 ± 0.085 g (ml) for intermediate chamber;
- 17.476 ± 0.032 g (ml) for outer chamber

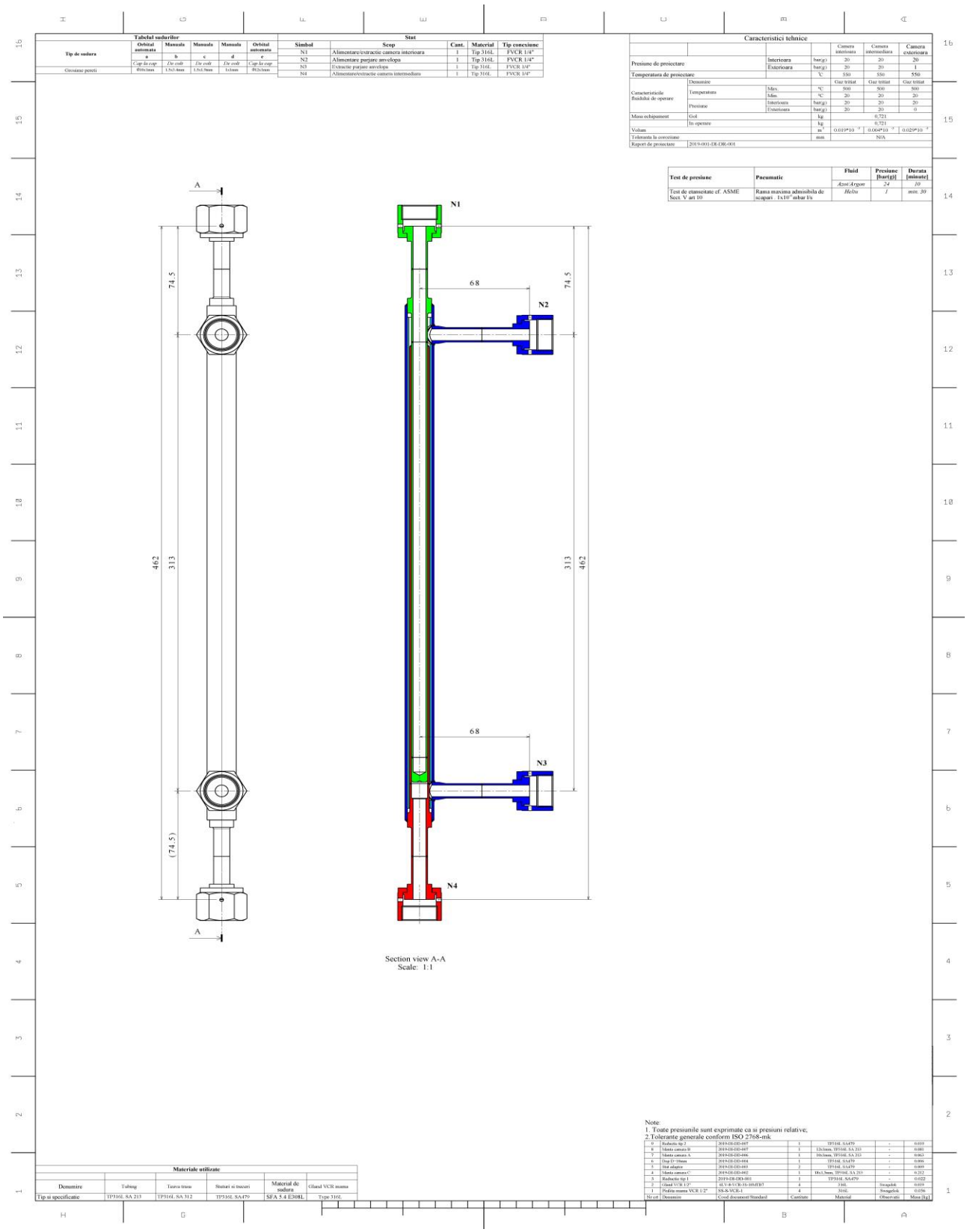

Figure 5-2 The general assembly drawing of IFIN HH permeation cell

5.2 Design and construction of the experimental set-up at IFIN HH

The experimental set-up at IFIN HH consists of the following main parts:

- Permeation cell;
- Rig for feeding the permeation cell with gas mixtures (Tritium, Deuterium and Helium)
- Support facilities for tritium accountancy and composition measurements

5.2.1 Installation of the permeation cell

The permeation cell was connected to a tritium supply line, a tritium monitor and a vacuum line aiming to measure the tritium content and flux at the reference locations. In Figure 5-3 the connection of the permeation cell is shown.

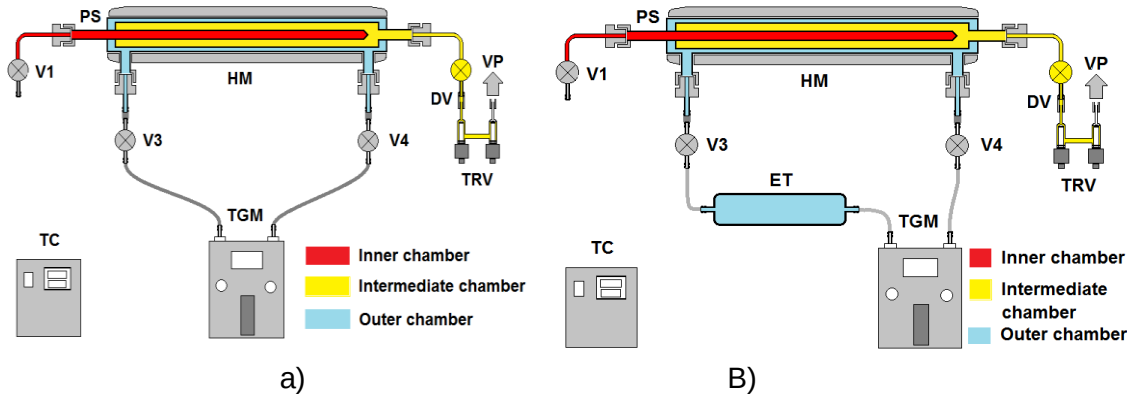

Figure 5-3 The connection of the permeation cell in view of tritium sampling at various locations

The connections from the Figure 5-3 are related to the measurements performed at 250^0 C (a) and 350^0 C (b). In the shown configuration in Figure 5-3 the abbreviations stand for:

PS - Permeation cell

HM- Heating mantle

TC-Temperature controller

V1-Valve for He:T mixture

V2- Valve for D2 H2O mixture

V3 and V4 – Valve for air recirculation in the outer chamber

TGM- Tritium gas Monitor RS400-HTO

TRV- Tritium Retention vial (volume 1.413 ml)

DV – Dead volume (1.848 ml)

VP- Vacuum pump Anest Iwata Japan

ET- Expansion tank (1230 ml)

The installation in the glove box of the permeation cell together with the above auxiliaries is shown in Figure 5-4.

Figure 5-4 Installation of the permeation cell and auxiliaries in the glove box

5.2.2 The rig for preparation of tritiated gas mixtures

A tritium gas ampoule that was available at IFIN HH has been used for this experiment. As this gas ampoules were stored at IFIN HH for more than 40 years the extraction and measurement of the T_2 from the mixture T_2 -^{3}He had to be performed. Therefore, a dedicated set-up as shown in Figure 5-5 has been installed and used.

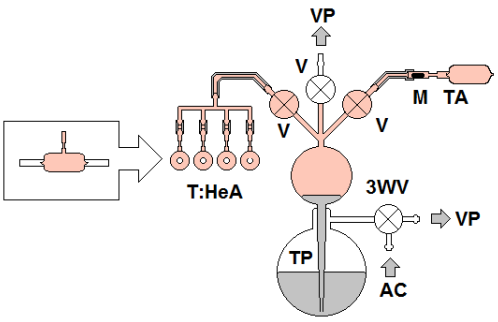

Figure 5-5 The set-up for tritium extraction from the gas ampoule

The abbreviations from the Figure 5-5 stands for:

TA- Tritium ampoule;

TP- Toepler pump;

V- Valves;

3WV- 3-way valve;

M - Breaking magnet;

VP –Dry Scroll Vacuum Pump SH 110 Varian France, ultimate pressure 6 Pa;

AC- Compressed air;

T:HeA- T_2 - ^{3}He mixture ampoules

The set-up allows collecting various amounts of tritium in the dedicated ampules that have been used in the experiments. The ampoules prepared for the permeation measurements contains mixtures of helium and tritium.

In the experiment was used a glass ampoule with T2 gas that had the tritium activity of 740 GBq at the purchase date -1977. The calculated composition of the gas mixture after 43 years of storage is T_2 - 3 % and ^{3}He- 97% that means that actual tritium activity is approx. 62 GBq.

The T_2 - ^{3}He mixture was transferred in 4 ampoules using a pump with Hg piston, Toepler type and sealed at flame. The volume of ampoules and connecting lines have been measured and the estimated tritium activity in each of the four ampoules is of ~3 GBq. The residual gas mixture was pumped in initial ampoule and sealed at flame. In the permeation experiments three ampoules have been used and thee forth was used to measure the tritium activity as a reference for the experiments.

5.2.3 The method for loading the inner and intermediate chambers with mixed gas containing tritium

In the Figures 5-6 and 5-7 the two configurations for loading the inner and intermediate chambers of the permeation cell are shown. The configuration allows feeding with a certain amount of tritium that was estimated based on the accuracy of the measuring devices.

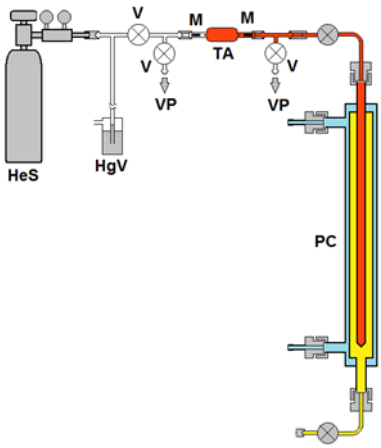

Figure 5-6 The feeding of the inner chamber with tritium

The abbreviations from Figure 5-6 stands for:

HeS- He supply (cylinder with pressure regulator);

HgV- Valve with Hg;

V- Valve;

VP - Dry Scroll Vacuum Pump SH 110 Varian France;

TA- T_2-He ampoule;

M- Breaking magnet;

PC- Permeation cell

The inner chamber was filled with a mixture T2-^{3}He-^{4}He based on the following protocol:

- The two branches of installation have been vacuumed using SH 110 vacuum pump.
- The ^{4}He cylinder was open and ^{4}He pressure was regulated by the Hg valve at 102.66 kPa.
- The connections with vacuum pump was closed and the section to the inner chamber of the T_2-^{3}He ampoule was broken using the magnet.

- The connection to the He supply line was open through the breaking magnet and the ^4He and T_2 - ^3He mixture was pumped into the inner chamber of the permeation cell.

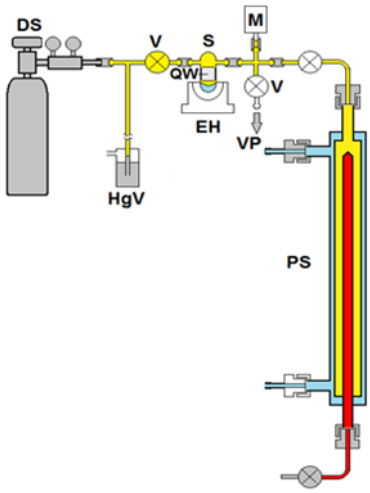

Figure 5-7 The feeding of the intermediate chamber

The meaning of the abbreviations is as follow:

DS- D2 supply (cylinder with pressure regulator);

HgV- Valve with Hg;

V- Valve;

S- Saturator;

QW-Quartz wool;

EH – Electrical heater;

M- Manometer;

VP- Dry vacuum pump Anest Iwata Japan (ultimate pressure 10 Pa);

PS- Permeation cell

The intermediate chamber was filled with D2 gas saturated with water vapour following the protocol:

- The saturator was fed with 5 ml demineralized water and cooled with liquid nitrogen;
- The entire set-up was vacuumed using the vacuum pump.
- The connections with D_2 supply and vacuum pump was closed and saturator was heated at 80^0 C. The pressure of water vapours, measured with the manometer has grown to 2 kPa.
- The D_2 cylinder was open. The D_2 pressure was regulated by the Hg valve at 102.66 kPa.
- By opening the connecting valve, D2 was pumped into the permeation stand.

5.2.4 Measurement of tritium permeated in the intermediate chamber and in the outer chamber

The tritium permeated in the intermediate chamber has been measured by sampling the gas in a sampling vial followed by oxidation and tritium measurement in the collected HTO. The set-up for sampling and oxidation is shown in Figure 5-8.

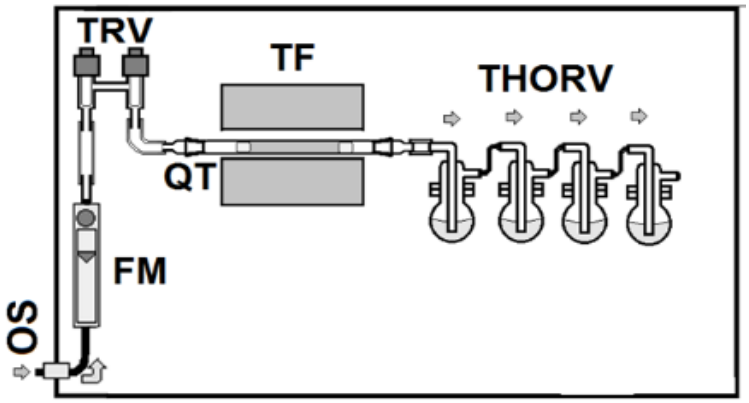

Figure 5-8 Set-up for sampling and oxidation of the gas from the intermediate chamber

The meaning of the abbreviations is as following:

OS- Oxygen supply;

FM-Flowmeter;

TRF- Tritium retention vial;

QT- Quartz tube which contain CuO catalyst wire;

TF- Tubular furnace RT 50-250/11 with B130 temperature controller Nabertherm;

THORV- HTO retention vials

The activities of tritium sampled from the intermediate chamber have been determined by oxidation in O2 atmosphere in presence of CuO catalyst, quantitative retention of resulted HTO and activities measurement using a Liquid Scintillation Spectrometer TRICARB TR2800 PE. The following oxidation protocol has been used:

- The gas was flashed over the CuO catalytic bed at 800^0C
- Oxygen flow rate: 4 l / min
- Oxidation time:1 h
- HTO retention: Fresh distilled water (4 vials with 5 ml each)

The tritium permeated in the outer chamber has been continuously measured by recirculating the air through the ionization chamber of the TGM, as shown in Figure 5-3. The activity of permeated tritium in the outer chamber has been calculated according to the following equation:

$$A_{OC}[Bq] = \frac{A_{TGM}[\mu Ci/m^3] \cdot 37000 \cdot V[ml]}{10^6}$$

were A_{OC} is the tritium activity in the outer chamber, A_{TGM} is the radioactive concentration showed by TGM (µCi/m3), 37000 represent correction factor µCi to Bq, V is the total volume of the recirculation area (250 ml in firs experiment and 1520 ml in the secondary) and 10^6 represent the correction factor between ml and m^3.

5.3 Experimental results

The IFIN HH experiments have been conducted during two campaigns. In the first campaign the operation temperature was $250^0 \pm 2^0$ C and the sampling of tritium has been performed every 48 hours, excepting the weekends when the sampling was realized after 72 hours. The aim of the first experiment was to get familiar with the operation of the entire tritium infrastructure and to get a reference for the dynamic of tritium permeation in support of the preparation of the second campaign.

The amount of tritium collected in the intermediate and outer chambers during the first 9 days of continuous operation is shown in Figures 5-9 and 5-10.

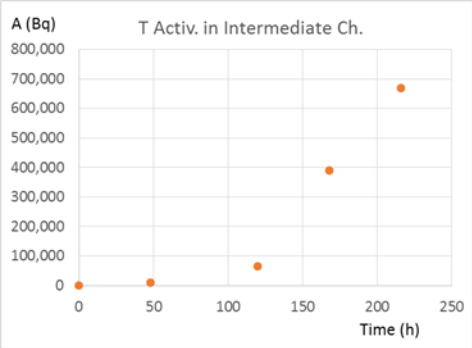

Figure 5-9 Evolution of tritium content in the intermediate chamber

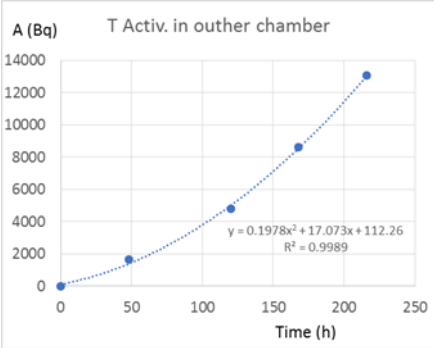

Figure 5-10 Evolution of tritium content in the outer chamber

The measurements collected during the first 9 days operation shows the significant decreasing of tritium permeation in the outer chamber due to the copper layer over the intermediate chamber. One of the main drawbacks of the first experiment is the fact that tritium from the intermediate chamber was quite entirely removed during the sampling process. This fact may decrease the tritium permeation flux in the outer chamber. Therefore, for the second campaign it was decided to measure only the amount of tritium permeated in the outer chamber.

In the preparation of the second campaign, the permeation cell has been decontaminated in the following mode. The three chambers have been preliminary decontaminated at 250^0 C by vacuum. In the next step, the chambers of the permeation cell have been flushed with hydrogen and steam at 350^0 C. The decontamination was continued until the tritium background decreased more than three order of magnitude compared with the values when decontamination started.

In the second campaign the inner chamber was fed with the same amount of tritium, approx. 3.0 GBq, and the operation temperature was increased at $350^0 \pm 4^0$ C. The first 6 samples have been taken every 48 h with the exception of the weekends (72 h) and last 4 samples have been measured weekly. The experimental results are shown in Figure 5-11.

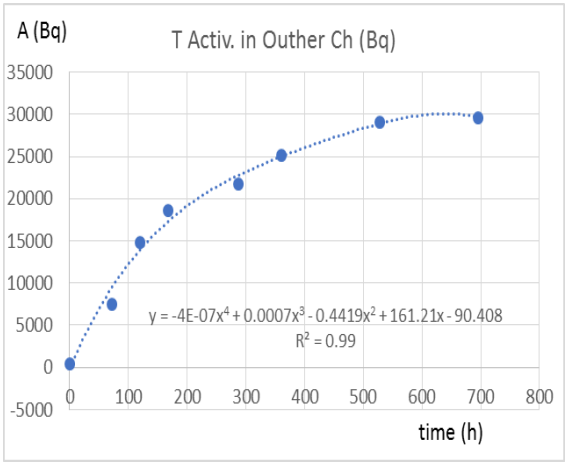

Figure 5-11 Evolution of tritium content in the outer chamber during the second campaign

5.4 Summary of the experimental results carried out at IFIN HH

During each of the experimental campaign, approx. 3.0E+09 Bq of tritium have been fed in the inner chamber of the permeation cell. The volumes of the three chambers are as following:

- 19.69 ± 0.06 (ml) for the inner chamber
- 5.20 ± 0.08 (ml) for the intermediate chamber;
- 17.48 ± 0.03 (ml) for the outer chamber

During the first experimental campaign with a duration of 9 days, the amount of tritium that permeates in the outer chamber was of 1.4E+04 Bq. The total amount of tritium that was sampled from the intermediate chamber during the entire period of the campaign it was of the order of 1.2E+06 Bq. Based on these measurements it may be considered that the decrease of the tritium content in the inner chamber doesn't play a significant role in the permeation process. It can be considered that the amount of tritium was almost entirely confined in the inner chamber and the intermediate chamber due to the copper layer that encloses the two chambers. In addition, the tritium permeation at 250^0 Celsius is quite slow.

During the second experimental campaign, the operation temperature was increased at 350^0 Celsius, and the amount of tritium permeated in the outer chamber after 30 days operation was of the same order 3.0E+04 Bq. Having in view that the volumes of the inner and outer chambers are quite equal, a reasonable preliminary conclusion is that the investigated barrier can provide a permeation reduction factor in the range $10^4 \div 10^5$.

6 Implementation of the active barrier concept in a CANDU relevant steam generator

6.1 General considerations

The Cernavoda Nuclear Power Plant is located in Romania and has two CANDU type reactors, operating for more than 15 years with no event that would jeopardize the plant safety, personnel, population and the environment, so there is a relevant expertise in their execution and operation of such type of reactors.

Each CANDU reactor has four identical steam generators which transfer the heat produced in the fuel channels to the light water that is transformed in steam. The steam generator represents the last active barrier against tritium release into the environment. The tritium barrier is provided in the steam generators by its configuration/construction. For this reason, the CANDU type steam generator was chosen as reference in the evaluation of the possibilities for the implementation of the active barrier concept. The active barrier concept is based on a double wall pipe and therefore a conceptual design of a steam generator using double wall pipe with the possibilities of tritium recovery from the interspace in between the two walls has been developed.

The developed conceptual design is particular for the CANDU steam generators but some features may be implemented in other types of heat exchangers that are relevant for fusion and fission applications. The main scope was to address the design and manufacturing topics that are relevant at the industrial scale.

The main technical challenge for implementation of the active barrier between the high tritium content hot stream and the secondary transport stream is related to the impact on heat transfer in between the two. In addition to this challenge, the tritium collection from the interspace between the two walls of the double pipe shall be addressed and implemented in the design and manufacturing process. The summary of the references for the design are as followings:

- Use the double wall heat exchange tubes;
- Accept the heat transfer reduction;
- Address the differential dilatation issue in the design;
- Address the fabrication issues based on state-of-the-art technologies;

6.2 Conceptual design of the existing steam generator in CANDU 600 NPP

In the CANDU 600 NPP four identical steam generators are installed and have the duty to transfer the heat from the reactor coolant (D2O) into a light water stream and to generate steam [1]. The steam generators consist of an inverted vertical U-tube bundle in a cylindrical shell. The steam separation is realized in the steam drum at the upper end of the shell as shown in Figure 6-1.

The primary side of the steam generators consists of the head, the primary side of the tube sheet and the tube bundle. A divider plate separates the inlet half of the head from the outlet half.

The Incoloy U-tubes are seal welded to the primary side of the Inconel clad low alloy steel tube sheet and hydraulically expanded into the tube sheet. The tubes wall, 1.13 mm thick and the total surface of 3194 m^2 is the existing barrier for tritium permeation from the primary cooling stream (tritiated D_2O) to the secondary side (water and steam).

The mean operation parameters of the two streams are as followings:

Heavy water

- Mean pressure: 9.625 MPa
- Mean temperature: 287.5 °C

Light water

- Mean pressure: 4.7 MPa
- Mean temperature: 260°C

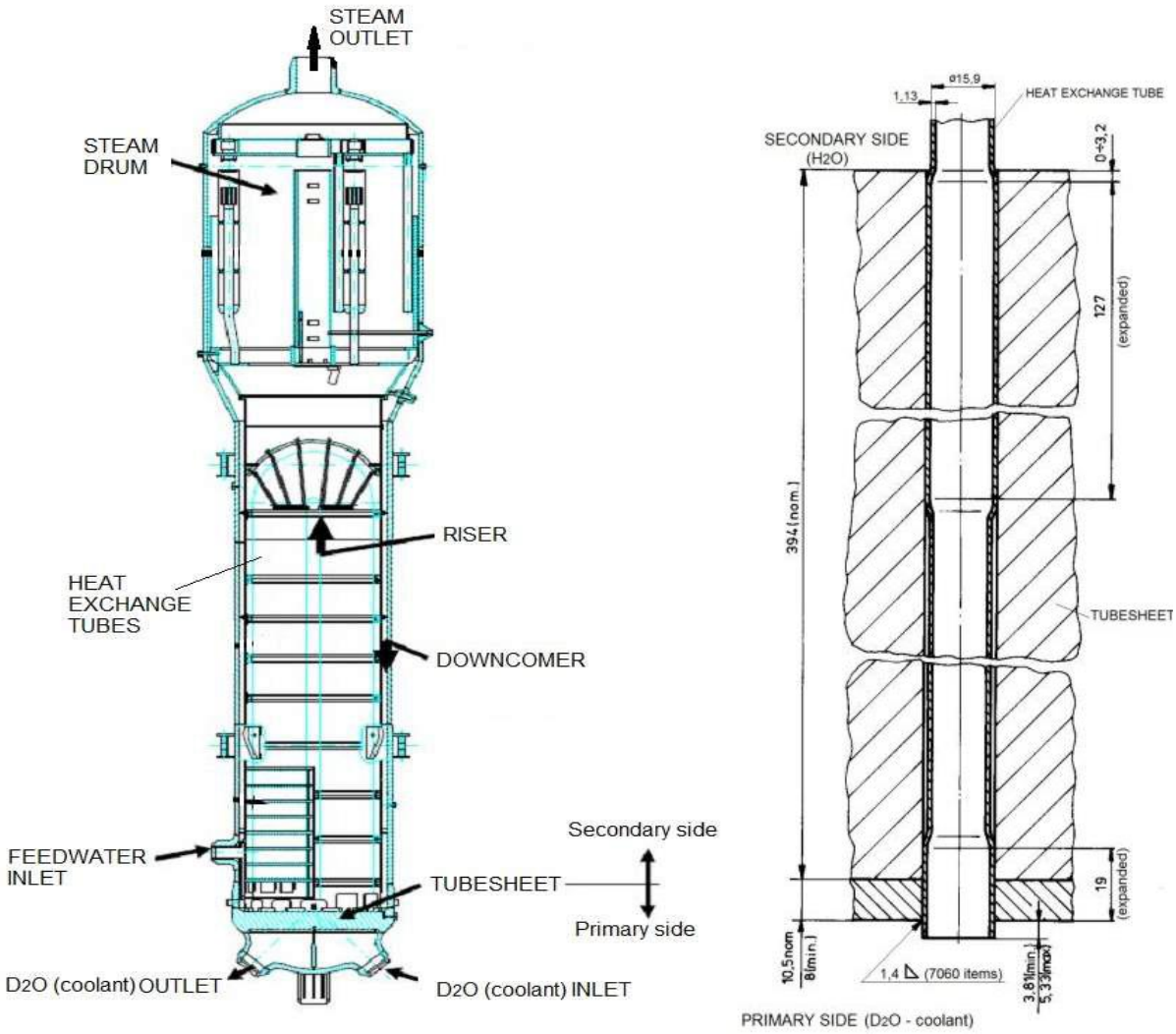

a) General assembly b) tube to tubesheet joint

Figure 6-1 CANDU 600 Steam Generator

The same design has been applied also for the moderator heat exchanger (except the removal of the steam drum) but the values mean operation parameters of the streams are lower:

- Heavy water (liquid)
  - Mean pressure: 0.69 MPa
  - Mean temperature: 63 °C

- Light water
  - Mean pressure: 0.69 MPa
  - Mean temperature: 41.5°C

The main difference between the moderator and steam generator is that the moderator contains about 60 Ci/kg tritium but the steam generator heavy water contains only about 2-2.5 Ci/kg.

6.3 Conceptual design of a heat exchanger with double tube sheet and double-wall tubes

The implementation of the proposed active barrier concept in a heat exchanger implies generating of a tritium collecting area/chamber from a double wall pipe configuration. The collecting area will mitigate further tritium permeation and provides as well tritium recovery.

Generally, U-bent tubes are used in the heat exchangers from NPP specially to avoid the thermal stress. For the development on the conceptual design based on active barrier against tritium permeation, both options based on U-bent tubes and tube bundle sheets are presented.

The main challenge of the design and fabrication of a heat exchanger that has implemented an active barrier against tritium permeation is to develop the collecting chamber in between two tube sheets: one to fix the outer tube and another to fix the inner tube.

The inner and the outer tube will be fixed for mechanical resistance by expanding and sealed by welding, similar to the existing heat exchangers as shown in Figure 6-2.

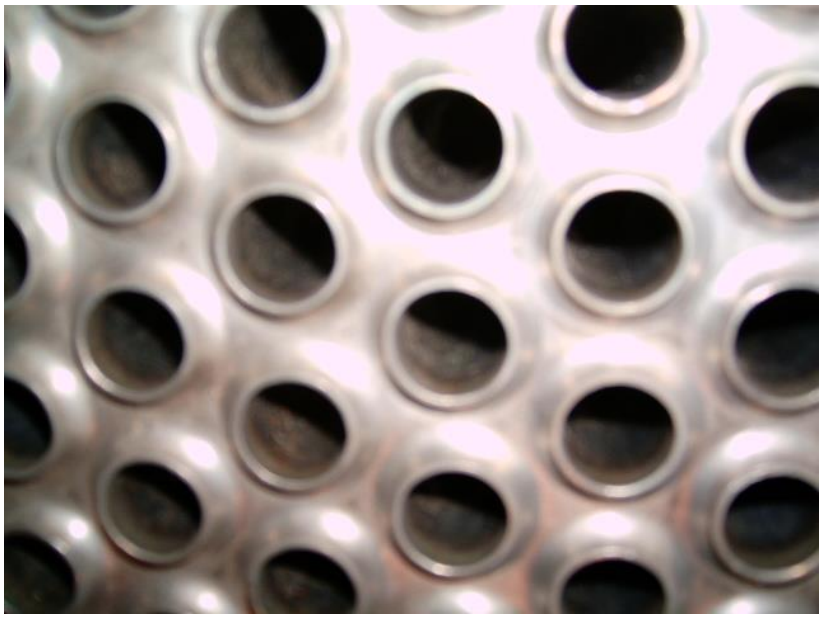

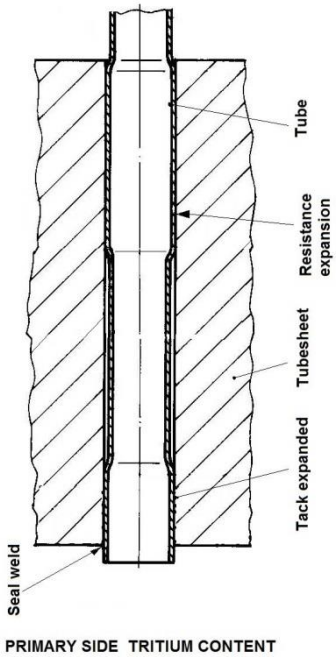

a) Section in the joint b) View of tube to tube sheet seal weld

Figure 6-2 Typical joint of the heat exchanger tube to the tube sheet

Considering the differential thermal dilatation between the inner and the outer tubes, the design must provide a floating head design: the floating head and the tube sheet fix and seal the inner tube (high temperature) and the tube sheet welded to the external shell will fix the outer tube having the temperature similar to that of the external shell.

The heat exchanger internals (support for the heat exchanger tubes) will be similar to the classical heat exchangers tube bundle.

The detailed design shall address the issue of differential dilatation between the high temperature inlet nozzle (connected to the floating head) and the external head. The configuration and the location of the collecting chamber is shown in Figure 6-3.

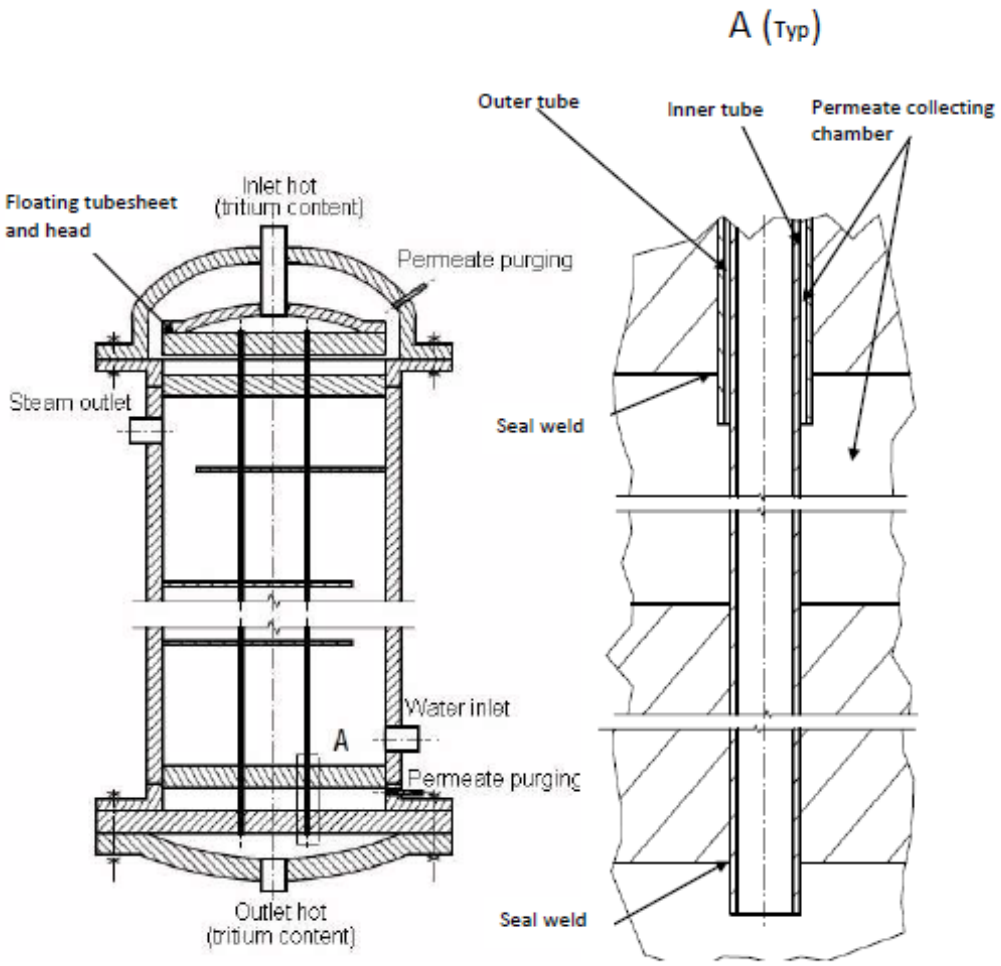

Figure 6-3 Conceptual design of heat exchanger with double wall tubes and permeate collecting chambers

In Figure 6-4, a sketch of the double wall tube heat exchanger and details of the tube to tube sheet joints are shown.

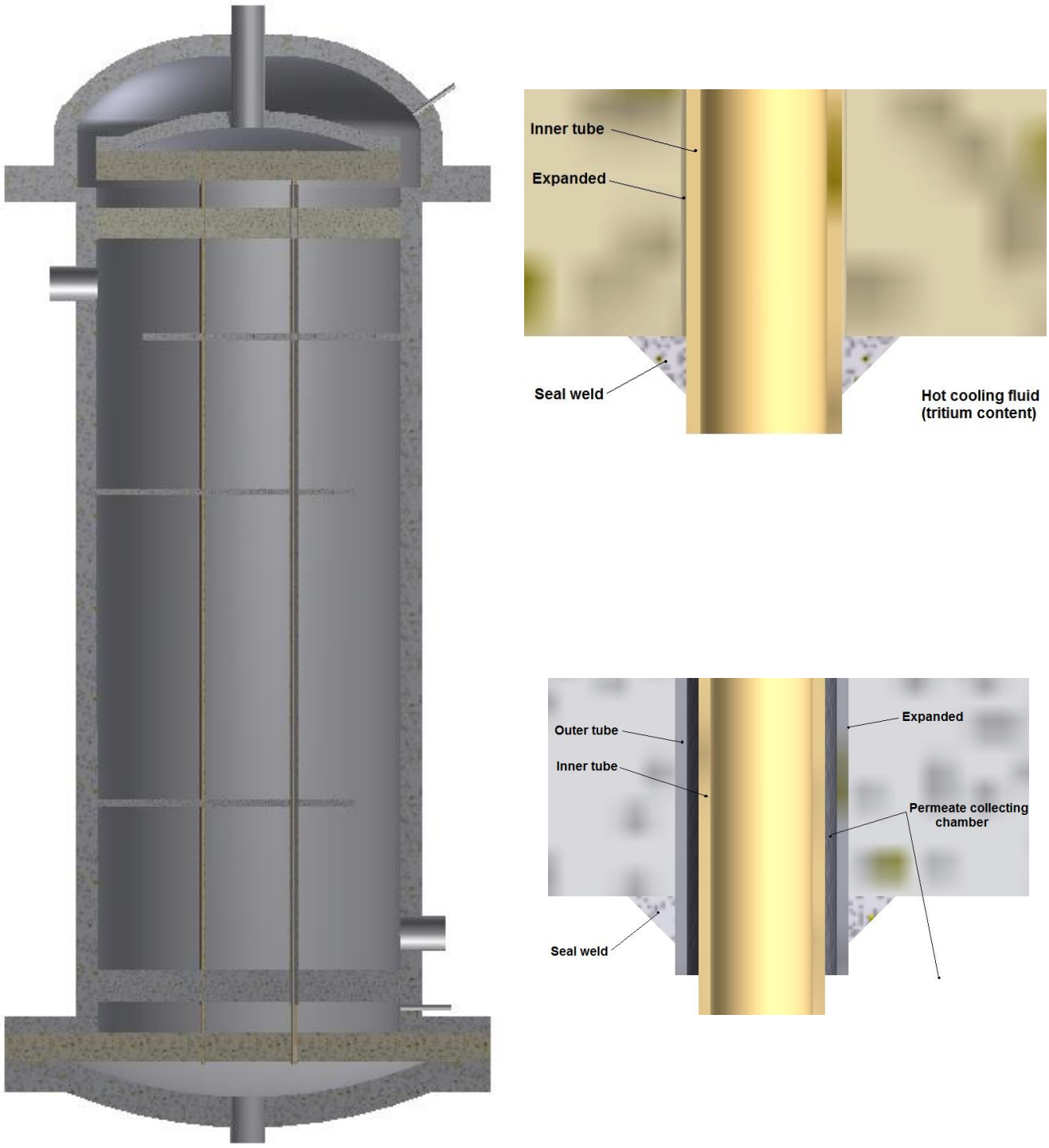

Figure 6-4 3D sketch of double wall tube heat exchanger and details of the tube to tube sheet joint

6.4 Conceptual design of steam generator with bayonet tubes

The sketch of a heat exchanger based on bayonet tube configuration is shown in Figure 6-5.

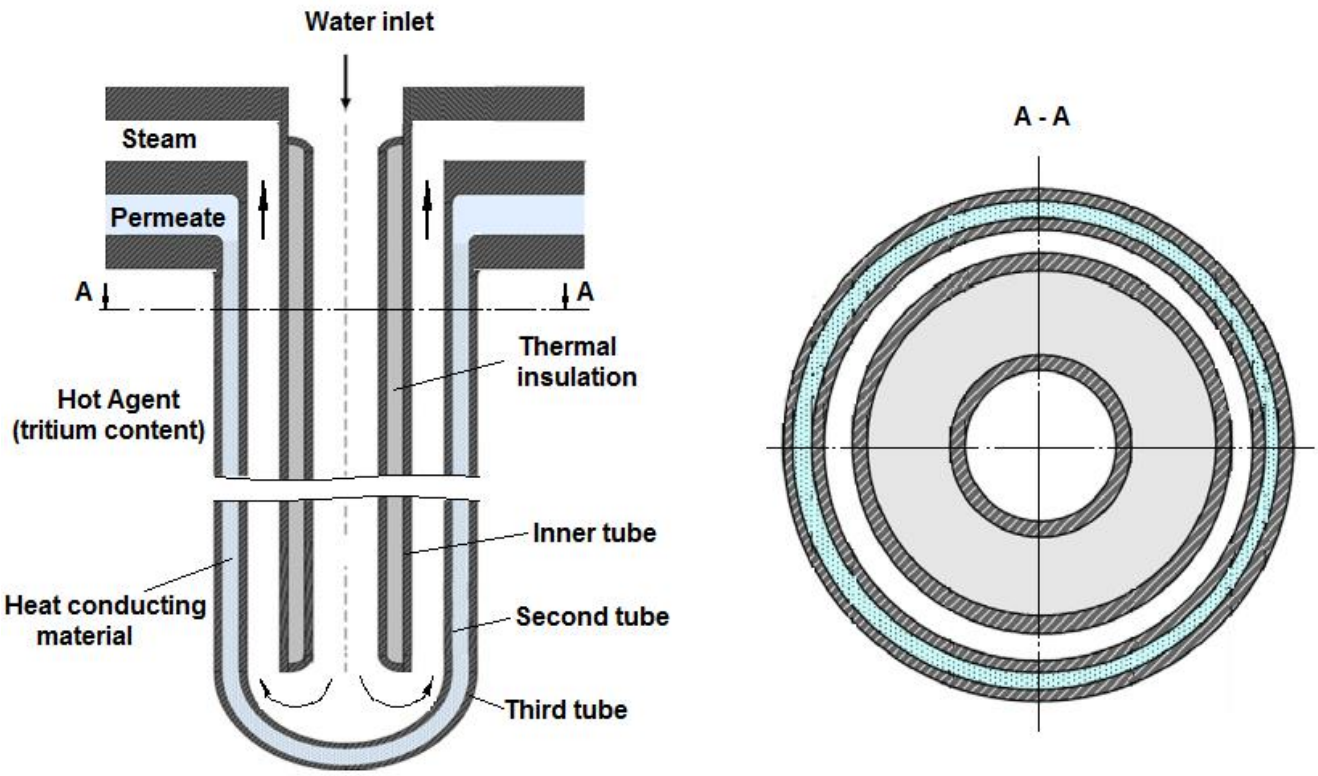

Figure 6-5 Bayonet tube configuration

The high temperature stream that contains tritium is flowing in the outside tube (third tube) and the low temperature water stream flows in the inner tube as shown in the above figure [2], [3], [4]. In order to avoid steam condensation, the inner tube shall be exterior insulated. In the case that a tritium collection chamber is implementing as an active barrier, the inter space between second tube and the third tube (the permeate chamber) must be filled with a good thermal conductivity material such a combination of helium/hydrogen with stainless steel powder or even artificial diamonds [5]. In this case, the third tube shall be welded to the tube sheet that supports the permeate chamber, the steam chamber, the bayonet tubes and the cylindrical shroud. The second tube shall be welded to the above tube sheet (second) and closing the permeate chamber. The inner tube will be welded to the top (third) tube sheet. The connections of all tubes to the tube sheets for the conceptual design of the heat exchanger with bayonet tubes based on active barrier concept are shown in Figure 6-6 [6].

Details related to the connections/joints of the various components of the proposed conceptual design of a steam generator with bayonet tubes are shown in Figure 6-7.

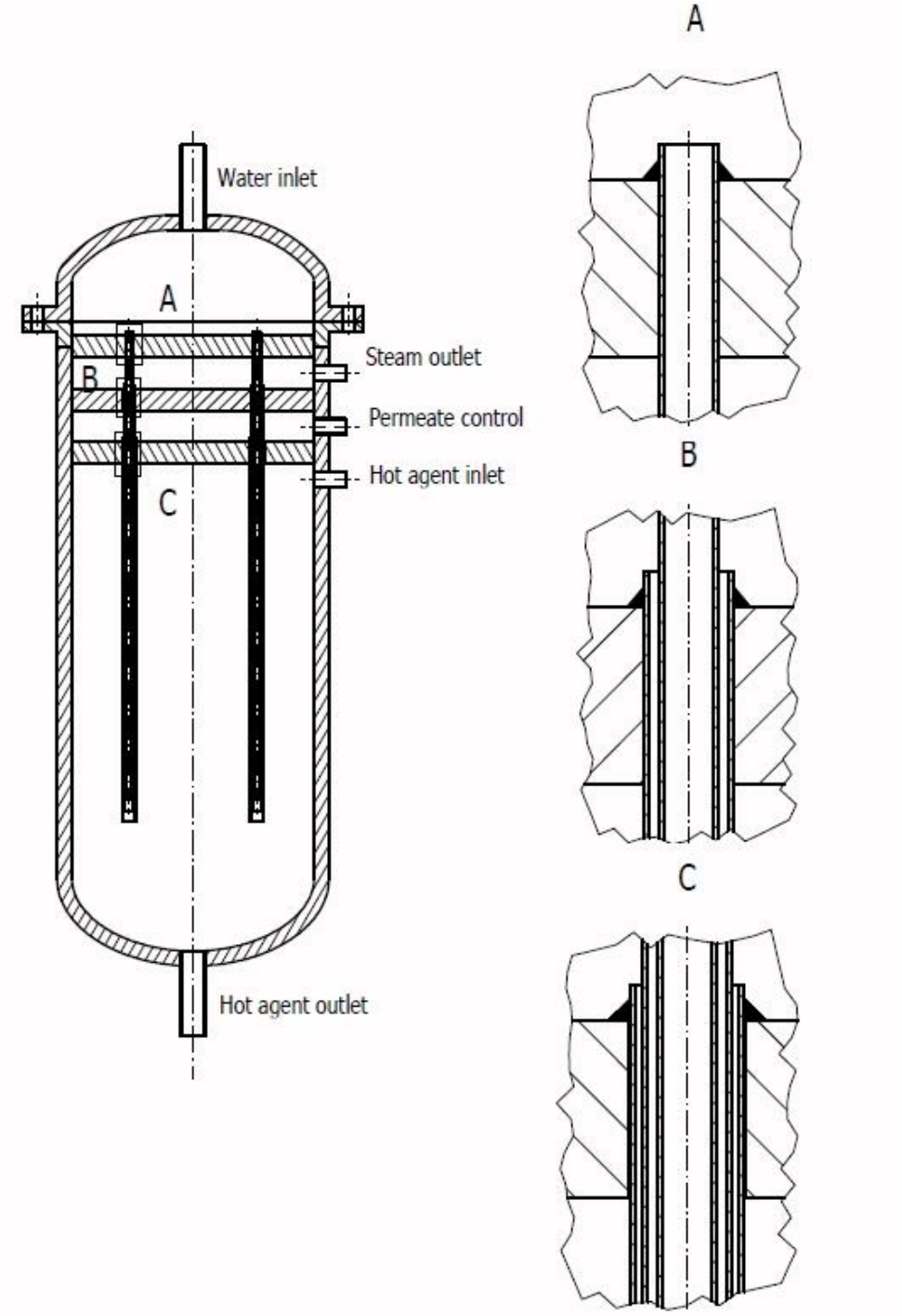

Figure 6-6 Conceptual design of the heat exchanger with bayonet tubes

Figure 6-7 3D sketch of the heat exchanger with bayonet tubes and details of tube to tube sheet joint

6.5 Consideration related to the heat transfer capacity of the proposed configuration

Generally, the double wall tubes do not provide a good heat transfer especially due to the possibility of air in grease in between the walls during the manufacturing process. Having in view the thermal conductivity of various gases, filling the interspace between the two walls with helium can be a suitable option as the thermal conductivity of helium is 0.16 W/m°K while the air thermal conductivity is only 0.026 W/m°K. Alternatively, this interspace may be filled with artificial diamond

crystals and the thermal conductivity may increase by 55 times. This means a conductivity of about 8.8 W/m°K comparable with the conductivity of the tube wall (14 W/m°K for Incoloy 800 or 15 W/m°K for stainless steel type 304).

Considering the above assumptions, it may be conservatively considered that the heat transfer is reduced with max 20% compared to the solution with one tube wall.

An additional issue is related to the bayonet tube type as in the inner tube cold water is entering and outside this tube the steam is flowing (see Figure 6-5). In order to avoid the occurrence of the water droplets on the outside surface of the inner tube (reducing the steam quality), this tube wall must be thermal insulated. The insulation can be realized by using a special insulating paint or using also a double tube wall with vacuum in the space between the tubes.

6.6 Design and fabrication codes

The two configurations proposed in chapters 3.3 and 3.4 were developed in conformity with the manufacturing standards. Both solutions presented are consistent with ASME III, Div.1. The applicable code for design and fabrication is ASME Section III Division 1 [7].

From Section III the following Subsections are applicable:

- NCA General Requirements for Division 1 and Division 2
- NB Class 1 Components
- NF Supports
- NH Class 1 Components in Elevated Temperature Service

Section III is asking also for:

- Section V Non-destructive examination
- Section IX Welding, Brazing and Fusing Qualifications
- Section II Materials Specifications

6.7 Proposed materials

The materials will be selected considering the following requirements:

- Good mechanical resistance at high temperature and thermal fatigue;
- Good performance on creep;
- Corrosion resistance;
- Good thermal conductivity and small rate of thermal expansion.

Based on previous experience the following main materials are recommended:

- Incoloy 800 (Specification SB-163 and SB 409 from ASME Section II and Subsection NH) for heat exchange tubes;
- Type SA 316 for the internals and other components. It can be used also for the shells;
- SA 516 gr.70 for shells;
- SA 508 gr. B for tube sheets.

6.8 Technological analysis

The proposed conceptual design does not imply insurmountable technological difficulties. The design and fabrication of the pressure shell and head, tube sheets, tube bundle supports, baffle plates, etc. are similar to the already applied solutions.

The special fabrication technologies such as: tube expansion, tube seal weld, tube sheet overlaying, eddy current examination of tubes, etc. are also similar to the already applied technologies. The technological challenge is resumed to the installation of the tubes and tube sheets.

The double wall tubes and the bayonet tubes cannot be fabricated outside the vessel and installed in the heat exchanger. Consequently, the followings shall be implemented during manufacturing:

- The third tubes and the connected tube sheet must be installed first, followed by the expanded outer tube and seal welded to the corresponding tube sheets;
- Subsequently, the second tube will be installed and the joint tube to corresponding tube sheet shall be completed;
- The last component of the bayonet tube will be finally installed and fixed to the corresponding tube sheets.

7 References

[1] Romanian Nuclear Power-Enterprise-Cernavoda Steam Generators -Babcock & Wilcox Canada project no. 222-7505/ 7506

[2] Andrea Bersano, Nicolò Falcone, Cristina Bertani, Mario De Salve, Bruno Panella - Conceptual design of a bayonet tube steam generator with heat transfer enhancement using a helical coiled down comer - Progress in Nuclear Energy 108 (2018) 243–252

[3] Frank Boni - The design of a liquid metal heated bayonet tube steam generator A.S.N.E. Journal. Mdy 1958

[4] Lorenzo Damiani, Massimo Montecucco, Alessandro Pini Prato - Conceptual design of a bayonet-tube steam generator for the ALFRED lead-cooled reactor Nuclear Engineering and Design 265 (2013) 154– 163

[5] Alan J. Slavin, Frank A. Londry, Joy Harrison - A new model for the effective thermal conductivity of packed beds of solid spheroids: alumina in helium between 100 and 500° C International Journal of Heat and Mass Transfer 43 (2000) 2059-2073

[6] Davide Rozzia, Alessio Pesetti, Alessandro Del Nevo, Mariano Tarantino, Nicola Forgione HERO test section for experimental investigation of steam generator bayonet tube of ALFRED - Proceedings of the 2017 25th International Conference on Nuclear Engineering ICONE25 July 2-6, 2017, Shanghai, China

[7] ASME – Section III Rules for Construction of Nuclear Facility Components, Division 1, Edition 2013